Comatrol

RESPONSIVENESS IN MOTION

Member of the Danfoss Group

Proportional Valves

www.comatrol.com

Comatrol
RESPONSIVENESS IN MOTION
Member of the Danfoss Group

Proportional Valves Catalog
Quick Reference

Proportional Directional	Model No.	Cavity	Description	Flow*	Pressure	Page
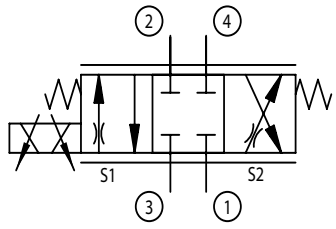	PSV10-34-02	SDC10-4	Proportional Directional Valve	22 l/min [6 US gal/min]	250 bar [3600 psi]	PV - 14
	PSV12-34-02	CP12-4		50 l/min [13 US gal/min]	250 bar [3600 psi]	PV - 16

Proportional Directional	Model No.	Cavity	Description	Flow*	Pressure	Page
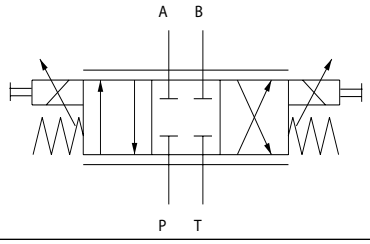	PDCV03-3Z11	ISO D03	Proportional Directional Valve	30.3 l/min [8 US gal/min]	350 bar [5075 psi]	PV - 18
	PDCV05-3Z11	ISO D05		60 l/min [16 US gal/min]	350 bar [5075 psi]	PV - 19

Proportional Directional	Model No.	Cavity	Description	Flow*	Pressure	Page
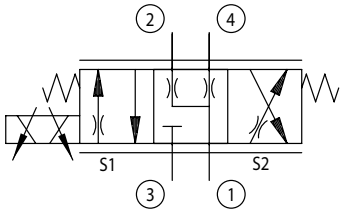	PSV10-34-05	SDC10-4	Proportional Directional Valve	22 l/min [6 US gal/min]	250 bar [3600 psi]	PV - 20
	PSV12-34-05	CP12-4		60 l/min [16 US gal/min]	250 bar [3600 psi]	PV - 22

Proportional Directional	Model No.	Cavity	Description	Flow*	Pressure	Page
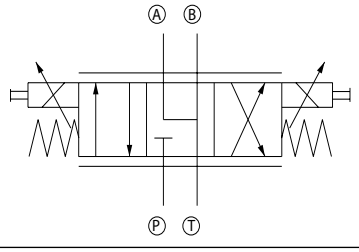	PDCV03-3Y11	ISO D03	Proportional Directional Valve	30.3 l/min [8 US gal/min]	350 bar [5075 psi]	PV - 24
	PDCV05-3Y11	ISO D05		60 l/min [16 US gal/min]	350 bar [5075 psi]	PV - 25

Proportional Flow Controls	Model No.	Cavity	Description	Flow*	Pressure	Page
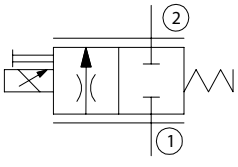	CP518-PNC	SDC08-2	Proportional Flow Control Valve, Non-Compensated, Normally Closed	12 l/min [3 US gal/min]	210 bar [3000 psi]	PV - 26
	PSV10-NC	SDC10-2		40 l/min [11 US gal/min]	260 bar [3770 psi]	PV - 27
	PSV12-NC	SDC12-2		80 l/min [21 US gal/min]	260 bar [3770 psi]	PV - 28
	PSV16-NC	SDC16-2		100 l/min [26 US gal/min]	260 bar [3770 psi]	PV - 29

* Flow ratings are based on a pressure drop of 7 bar [100 psi] unless otherwise noted. They are for comparison purposes only.

Comatrol
RESPONSIVENESS IN MOTION
Member of the Danfoss Group

Proportional Valves Catalog
Quick Reference

Proportional Flow Controls	Model No.	Cavity	Description	Flow*	Pressure	Page
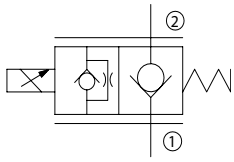	PSVP10-NCR	SDC10-2	Proportional Flow Control Valve, Non-Compensated, Normally Closed, Poppet Type	55 l/min [14 US gal/min]	260 bar [3770 psi]	PV - 30
	PSVP12-NCR	SDC12-2		70 l/min [18 US gal/min]	260 bar [3770 psi]	PV - 31
	PSVP16-NCR	SDC16-2		90 l/min [24 US gal/min]	260 bar [3770 psi]	PV - 32

Proportional Flow Controls	Model No.	Cavity	Description	Flow*	Pressure	Page
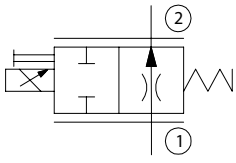	CP518-PNO	SDC08-2	Proportional Flow Control Valve, Non-Compensated, Normally Open	12 l/min [3 US gal/min]	210 bar [3000 psi]	PV - 33
	PSV10-NO	SDC10-2		45 l/min [12 US gal/min]	260 bar [3770 psi]	PV - 34
	PSV12-NO	SDC12-2		100 l/min [26 US gal/min]	260 bar [3770 psi]	PV - 35
	PSV16-NO	SDC12-2		110 l/min [29 US gal/min]	260 bar [3770 psi]	PV - 36

Proportional Flow Controls	Model No.	Cavity	Description	Flow*	Pressure	Page
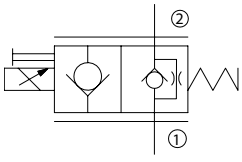	PSVP10-NOR	SDC10-2	Proportional Flow Control Valve, Non-Compensated, Normally Open, Poppet Type	45 l/min [12 US gal/min]	260 bar [3770 psi]	PV - 37
	PSVP12-NOR	SDC12-2		70 l/min [18 US gal/min]	260 bar [3770 psi]	PV - 38
	PSVP16-NOR	SDC16-2		80 l/min [21 US gal/min]	260 bar [3770 psi]	PV - 39

Proportional Flow Controls	Model No.	Cavity	Description	Flow*	Pressure	Page
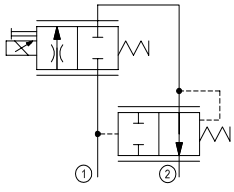	PFC10-RC	SDC10-2	Proportional Flow Control Valve, Pressure Compensated, Restrictive Type, Normally Closed	30 l/min [8 US gal/min]	260 bar [3770 psi]	PV - 40
	PFC12-RC	SDC12-2		65 l/min [17 US gal/min]	260 bar [3770 psi]	PV - 41
	PFC16-RC	SDC16-2		90 l/min [24 US gal/min]	260 bar [3770 psi]	PV - 42

Proportional Flow Controls	Model No.	Cavity	Description	Flow*	Pressure	Page
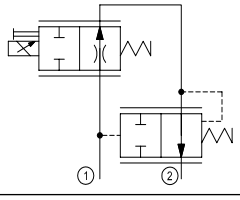	PFC10-RO	SDC10-2	Proportional Flow Control Valve, Pressure Compensated, Restrictive Type, Normally Open	30 l/min [8 US gal/min]	260 bar [3770 psi]	PV - 43
	PFC12-RO	SDC12-2		60 l/min [16 US gal/min]	260 bar [3770 psi]	PV - 44
	PFC16-RO	SDC16-2		85 l/min [22 US gal/min]	260 bar [3770 psi]	PV - 45

* Flow ratings are based on a pressure drop of 7 bar [100 psi] unless otherwise noted. They are for comparison purposes only.

Comatrol
RESPONSIVENESS IN MOTION
Member of the Danfoss Group

Proportional Valves Catalog
Quick Reference

Proportional Flow Controls	Model No.	Cavity	Description	Flow*	Pressure	Page
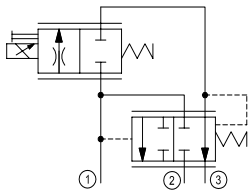	PFC10-PC	SDC10-3	Proportional Flow Control Valve, Pressure Compensated, Priority Type, Normally Closed	40 l/min [11 US gal/min]	260 bar [3770 psi]	PV - 46
	PFC12-PC	SDC12-3		65 l/min [17 US gal/min]	260 bar [3770 psi]	PV - 47
	PFC16-PC	SDC16-3		85 l/min [22 US gal/min]	260 bar [3770 psi]	PV - 48

Proportional Flow Controls	Model No.	Cavity	Description	Flow*	Pressure	Page
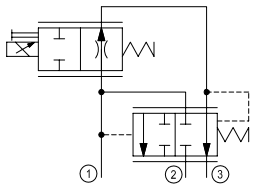	PFC10-PO	SDC10-3	Proportional Flow Control Valve, Pressure Compensated, Priority Type, Normally Open	35 l/min [9 US gal/min]	260 bar [3770 psi]	PV - 49
	PFC12-PO	SDC12-2		70 l/min [18 US gal/min]	260 bar [3770 psi]	PV - 50
	PFC16-PO	SDC16-3		90 l/min [24 US gal/min]	260 bar [3770 psi]	PV - 51

Proportional Pressure Reducing	Model No.	Cavity	Description	Flow*	Pressure	Page
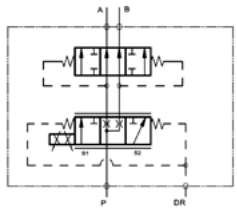	PFD10-OD	CIB	Proportional FLow Divider, Compensated, Catalog HIC	40 l/min [11 US gal/min]	230 bar [3335 psi]	PV - 52

Proportional Pressure Reducing	Model No.	Cavity	Description	Flow*	Pressure	Page
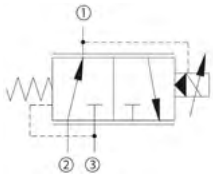	PPR10-PAC	SDC10-3	Proportional Pressure Reducing/Relieving Valve, Piloted, Normally Closed	18 l/min [5 US gal/min]	250 bar [3625 psi]	PV - 54

Proportional Pressure Reducing	Model No.	Cavity	Description	Flow*	Pressure	Page
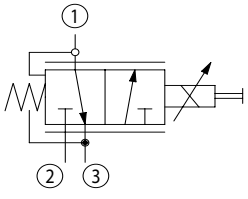	CP558-24	SDC08-3	Proportional Pressure Reducing Valve, Direct Acting, Normally Open	4 l/min [1 US gal/min]	34 bar [500 psi]	PV - 55

Proportional Pressure Reducing	Model No.	Cavity	Description	Flow*	Pressure	Page
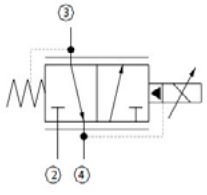	PPR09-POD	SDC10-4	Proportional Pressure Reducing/Relieving Valve, Piloted, Normally Open	25 l/min [7 US gal/min]	50 bar [700 psi]	PV - 56

* Flow ratings are based on a pressure drop of 7 bar [100 psi] unless otherwise noted. They are for comparison purposes only.

Comatrol
RESPONSIVENESS IN MOTION
Member of the Danfoss Group

Proportional Valves Catalog
Quick Reference

Proportional Pressure Reducing	Model No.	Cavity	Description	Flow*	Pressure	Page
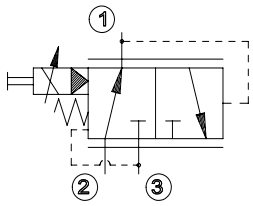	XRP 06	NCS06/3	Proportional Pressure Reducing/Relieving Valve, Piloted, Normally Open	25 l/min [7 US gal/min]	315 bar [4500 psi]	PV - 58

Proportional Pressure Relieving	Model No.	Cavity	Description	Flow*	Pressure	Page
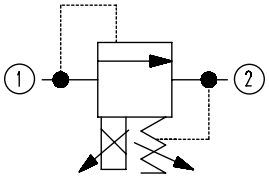	PRV08-DAC	SDC08-2	Proportional Pressure Relief Valve, Direct Acting, Normally Closed	3.78 l/min [1.0 US gal/min]	215 bar [3120 psi]	PV - 59
	HPRV08-DAC	SDC08-2		1.89 l/min [0.5 US gal/min]	350 bar [5075 psi]	PV - 60

Proportional Pressure Relieving	Model No.	Cavity	Description	Flow*	Pressure	Page
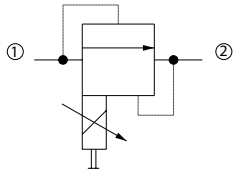	XMD 04	NCS04/2	Proportional Pressure Relief Valve, Direct Acting, Normally Open	5 l/min [1 US gal/min]	250 bar [3600 psi]	PV - 61
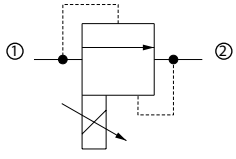	CP558-20	SDC08-2		8 l/min [2 US gal/min]	210 bar [3000 psi]	PV - 62

Proportional Pressure Relieving	Model No.	Cavity	Description	Flow*	Pressure	Page
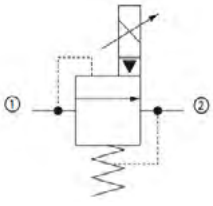	PRV10-POC	SDC10-2	Proportional Relief Valve, Pilot Operated, Normally Closed	76 l/min [20 US gal/min]	250 bar [3600 psi]	PV -63
	PRV12-POC	SDC12-2		180 l/min [48 US gal/min]	250 bar [3600 psi]	PV -64

Proportional Pressure Relieving	Model No.	Cavity	Description	Flow*	Pressure	Page
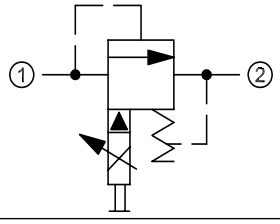	XMP 06	NCS06/2	Proportional Relief Valve, Pilot Operated, Normally Open	50 l/min [13 US gal/min]	315 bar [4500 psi]	PV - 65

* Flow ratings are based on a pressure drop of 7 bar [100 psi] unless otherwise noted. They are for comparison purposes only.

PROPORTIONAL VALVES

Proportional, or electro-proportional valves, provide infinitely variable control of flow, pressure, or direction, in response to a electric input signal.

There are four basic types of Comatrol proportional valves:

- Flow control valves.
- Pressure reducing/relieving valves.
- Pressure relief valves.
- Directional control valves

Proportional valves

PLUS+1™ COMPLIANT

Comatrol solenoid valves are PLUS+1™ compliant. PLUS+1 compliance means our valves are directly compatible with the PLUS+1 machine control architecture. Adding solenoid valves to your application using PLUS+1 GUIDE software is as easy as *drag-and-drop*. Software development that used to take months can now be done in just a few hours. For more information on PLUS+1 GUIDE, visit ***www.comatrol.com*** or *http://powersolutions.danfoss.com/Applications/PLUS1Compliance/index.htm*. The table below details available GUIDE function blocks for controlling Comatrol solenoid valves.

GUIDE function blocks

Two-way proportional	10106103
Three-way proportional	10106104

PROPORTIONAL FLOW CONTROL VALVES

Comatrol proportional flow control valves are 2-way, spool-type valves that are directly operated with a proportional electromagnetic solenoid actuator. By controlling electric current, these valves create an infinitely variable orifice.

Proportional flow control valve

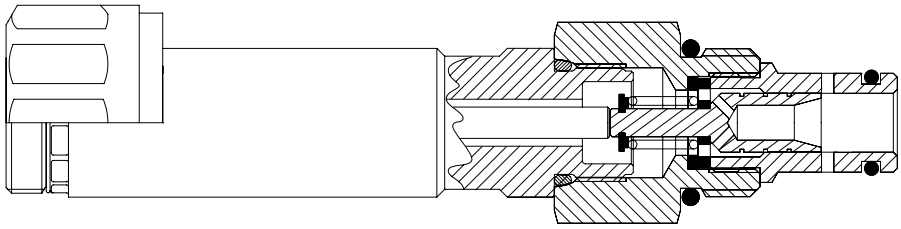

These valves are designed to be used with a logic element to provide pressure compensation. Pressure compensation provides two advantages:

1. A constant pressure differential is maintained across the proportional valve (variable orifice), which maintains constant flow regardless of changes in operating pressure or load.

2. A constant pressure differential across the proportional valve limits the flow forces acting on the valve spool. At high flow and pressure, the electromagnetic and spring forces can be insufficient to maintain valve operation without pressure compensation.

Typical flow versus pressure drop

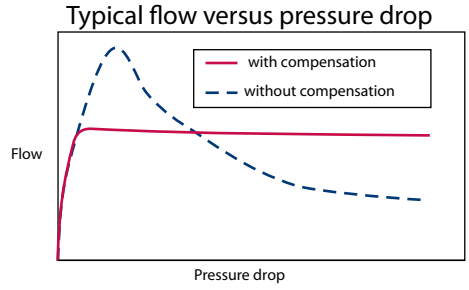

Typical circuits use restrictive-type or priority-type pressure compensators with proportional flow control valves to control speed of a hydraulic motor or cylinder.

Proportional flow control valves are available with a variety of flow capabilities (variable orifice sizes). By matching this flow capability to various pressure compensator settings, a wide range of flow vs. current control curves can be attained.

Typical circuit using a proportional valve

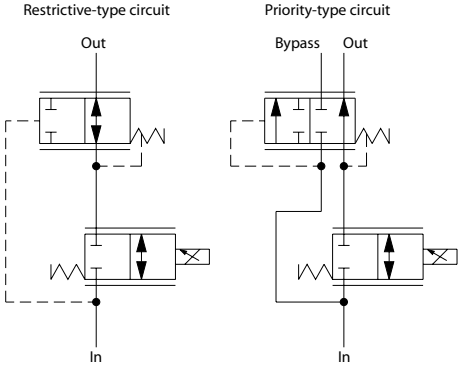

Flow versus current

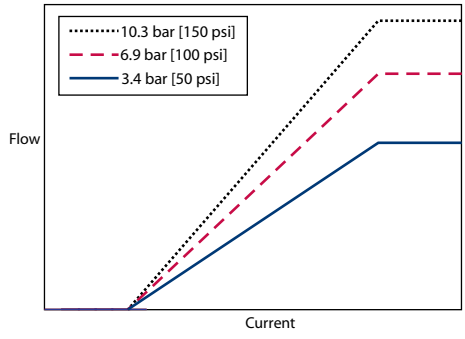

Effect of pressure compensator setting

PROPORTIONAL PRESSURE REDUCING/ RELIEVING VALVES

Proportional pressure reducing/relieving valves are 3-way valves that provide a controlled output pressure as a function of electric current, regardless of system pressure or flow (within the valve's limits). Direct acting designs are available for low-flow applications.

Direct-acting, proportional, pressure reducing valve

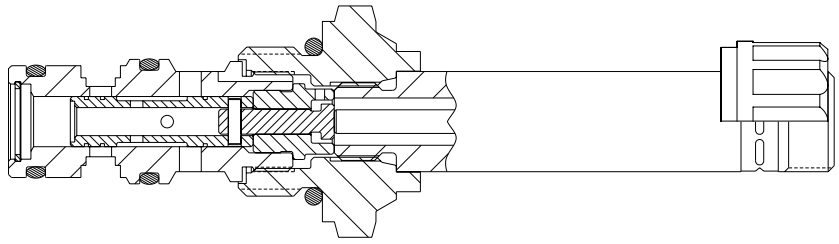

Proportional pressure reducing valves have a variety of applications including:

- Single acting cylinder position control, e.g. combine header height control.
- Clutch or brake pressure control.
- Pilot signal to a directional control valve. By slowly ramping the current to the proportional valve in this example, a soft-start and soft-stop is attained.

Clutch pressure control

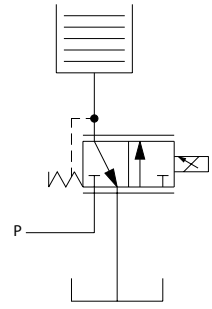

Pilot signal to directional spool valve

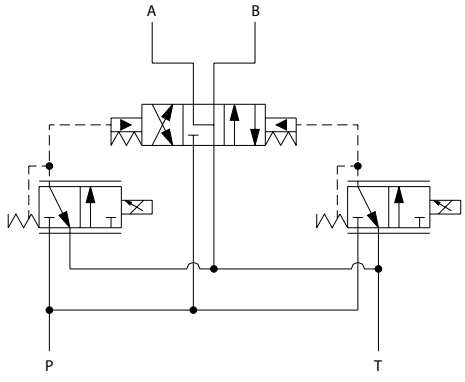

Single-acting cylinder piston control

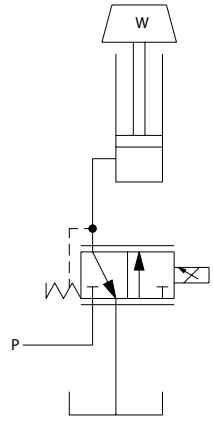

High flow proportional pressure reducing valve functions can be created by using a proportional valve to pilot a differential sensing valve; see differential sensing valve application notes for more information.

PROPORTIONAL PRESSURE RELIEF VALVES

Proportional pressure relief valves are 2-way valves that provide a relief pressure as a function of electric current. Both normally-open (increasing pressure with increasing current), and normally-closed (decreasing pressure with increasing current) are available.

Normally closed versus normally open proportional relief valves

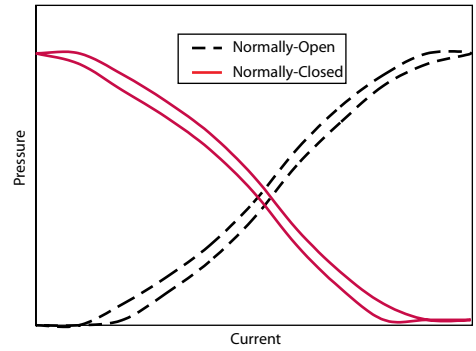

The normally-open proportional relief valve is a direct-acting design for low flow applications. High flow normally-open proportional relief valve functions can be created by using a proportional valve to pilot a differential sensing valve; see differential sensing valve application notes for more information.

Normally-open proportional relief valve

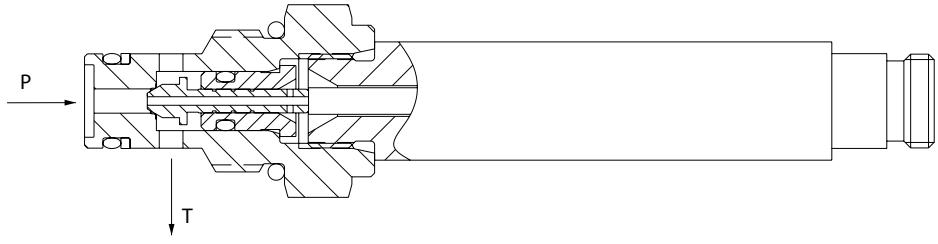

Common applications for normally-open proportional relief valves are:

- Electro-proportional control of system relief pressure; see differential sensing valve application notes for more information.
- Electro-proportional remote pressure compensator control for open circuit piston pumps (for more information refer to BLN-10128 Series 45 Open Circuit Axial Piston Pumps Technical Information).

Remote pressure compensator pump control

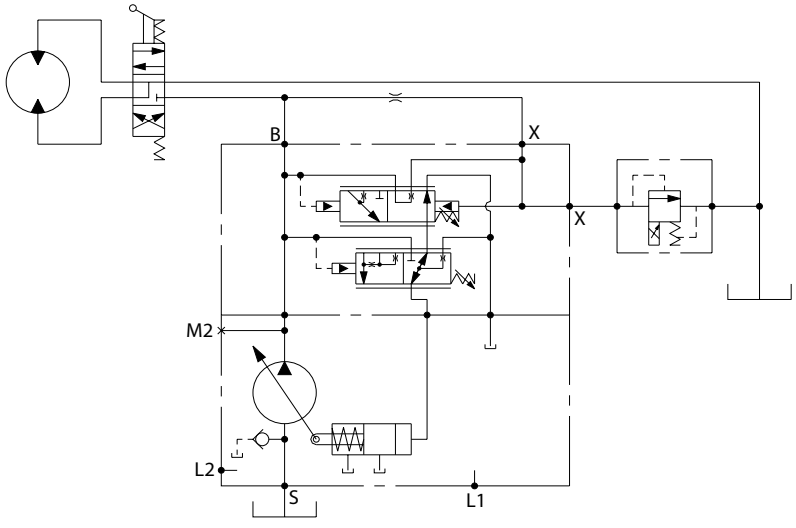

PROPORTIONAL PRESSURE RELIEF VALVES (continued)

Normally-closed proportional relief valves are available in direct-acting and pilot-operated designs. A direct-acting, normally-closed proportional relief valve is used for low flow applications. For high flow applications, internally pilot-operated cartridges are available.

Internally pilot-operated cartridge for high flow applications

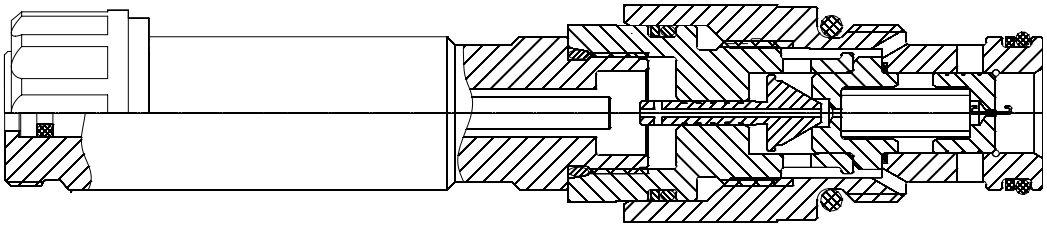

Common applications for normally-closed proportional relief valves are:

- Electro-proportional control of system relief pressure or electro-proportional remote pressure compensator control for open circuit piston pumps as above, but where system requirements dictate full pressure with no electrical signal.
- Cooling fan speed control in hydrostatic fan drive systems. (For more information refer to BLN-10080 *Fan Drives Systems and Components Technical Information*).

Cooling fan speed control

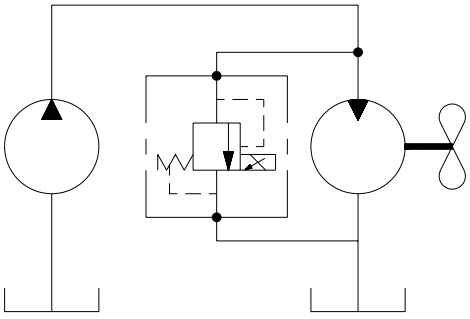

ELECTRICAL REQUIREMENTS

All proportional cartridge valves are analog-type valves that control flow or pressure as a function of electric current. For this reason, proportional valves should be driven with a current-controlled device that will maintain constant output regardless of changes in system voltage, line losses, or temperature. Typically available current-controlled valve drivers output a pulse-width-modulated (PWM) square-wave signal. An advantage of a PWM signal is that the dither it provides significantly reduces hysteresis. Comatrol recommends using a 100-200 Hz dither for best performance.

Proportional valve hysteresis

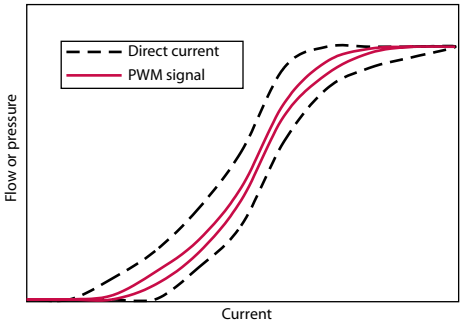

Typical performance

TERMS AND DEFINITIONS

Compensator is a hydraulic component that maintains a constant pressure drop across a fixed or variable orifice.

Current is the flow of electricity through a conductor or coil, normally measured in amps (A). Steady-state current flow in an electrical circuit can be calculated by Ohm's Law, as well as voltage and resistance.

Ohm's Law $I = \frac{V}{R}$

Current Control is a feature of almost all valve drivers. The output of analog proportional valves is a direct function of current. If a valve is controlled with voltage, higher solenoid temperatures, which increase solenoid resistance, will result in lower valve output. To compensate for this, most valve drivers are designed with current feedback circuitry. This means that as solenoid temperature rises or as supply voltage and voltage losses change, the current and corresponding valve output are maintained.

Current feedback circuit

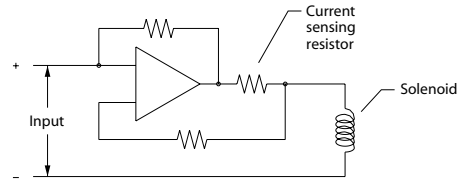

Deadband is the range from zero to the minimum current which causes the valve to respond.

Digital Proportional Valves are extremely fast responding valves that are controlled by a precise on-off signal to produce an average output that is a function of duty cycle.

Dither is a "ripple" signal sent to a solenoid to reduce hysteresis. Dither can be a sine, square, or saw-tooth wave superimposed on a PWM signal or it can be a wave on top of a DC signal.

Duty Cycle is the % of time the valve is on divided by total time.

Hysteresis is the difference in output for a given input, depending on whether the input is increasing or decreasing. It is normally expressed as a % of the maximum rated output. For example, if a 160 l/min 42 US gal/min proportional flow control valve provides 80 l/min 21 US gal/min with 1 amp-increasing and 88 l/min 23 US gal/min at 1 amp-decreasing, the hysteresis is:

$$\frac{(88-80)}{160} = 5\%$$

$\mathbf{I_{min}}$ is the minimum current required for valve response (see deadband).

$\mathbf{I_{max}}$ is the current required for maximum valve output.

Proportional Valves are analog devices controlled by electric current which may be direct current (DC) or a PWM signal.

TERMS AND DEFINITIONS (continued)

PWM is an acronym for Pulse-Width-Modulation. Most valve drivers use a current controlled PWM which produces an average output that is a function of duty cycle in order to reduce valve hysteresis and to allow current control without excessive heat generation. A typical PWM output is a square wave from 80-500 Hz.

Ramping is the application of current to a solenoid with a linear or non-linear ramp, rather than an instantaneous step. Ramping current on and off to a proportional valve provides actuators with soft-starts and soft-stops. Ramps can generally be set or pre-programmed into valve drivers.

Resistance is a component's opposition to the flow of electrical current, usually measured in ohms (Ω). Resistance depends on the conductivity of the material, as well as size, shape, and temperature. Solenoid resistance can vary greatly with temperature; to compensate for this, current-controlled drivers are generally always used with proportional valves.

Threshold is the minimum current required for valve response; see deadband.

Valve Driver is a generic term for any device that sends a signal to a proportional valve. A valve driver may range from a simple electronic circuit attached to a knob or lever up to a microcontroller with custom software and multiple inputs and outputs.

Voltage is the potential for current to flow in an electric circuit, usually measured in volts (V).

MANUAL OVERIDE OPTIONS

MANUAL OVERIDES

Comatrol proportional flow control valves, where noted in the individual catalog pages, have optional manual overrides - "SPS" and "PB" (note that it if the valve has a manual override option, it comes standard with a push-pin style override). The manual overrides are "safety" features for when power is lost and the proportional valve needs to be operated. If using the "SPS" option, the screw-style manual override can be used to proportionally adjust the flow setting when no power is supplied to the coil. When using the "PB" option, the push-button manual override will push to fully open or fully close the valve, which can send full flow, or cut-off the flow to the system. So caution must be taken when applying in a proportional system. The "SPS" proportional control is preferred. The manual overrides, when activated, shift the valve to its energized position.

MANUAL OVERRIDE OPTIONS

Override Activated (mm)	Normal Position (mm)	Size	Order Code	Description
	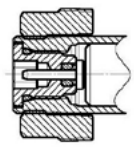	10, 12, 16 Sizes	OMIT (PN for HSV's)	Standard for any valve with push-pin manual override feature, where indicated in the catalog.
	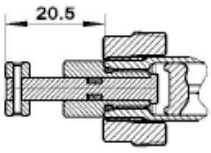	10, 12, 16 Sizes	PB Push Button	Optional feature for any valve with push-pin manual override.
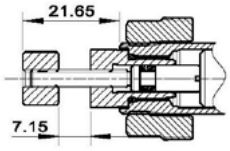	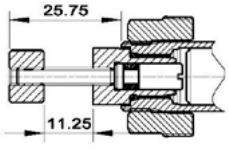	10, 12, 16 Sizes	SPS Screw Style (Push Type Valves)	Optional feature for any valve with push-pin manual override. Part number for SPS Manual Override Kit is 272601688.
	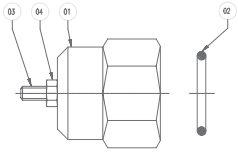	04 and 06 Sizes (metric)	EN Screw style	Optional feature for screw adjustment for proportional valves (XMD 04 and XMP 06)

Comatrol
RESPONSIVENESS IN MOTION
Member of the Danfoss Group

Proportional Valves Catalog
Proportional Directional
PSV10-34-02

Shown with standard coils, DIN connectors

Shown with Robust Coil

OPERATION

This is a proportional, non-compensated, 3 position 4 way, directional flow control solenoid valve, with closed-center spool.

APPLICATIONS

This is an electro-proportional directional control using a 3-Position, 4-Way design for directional control of hydraulic cylinders and motors. For load-independent flow control, apply with a pressure compensator, like CP700-4 (see Example Circuit). Port 1 should be used as the tank port, with a maximum back-pressure of 150 bar. The highest return flow coming from a cylinder should be connected to Port 2.

Use the available Comatrol Adapter Block (SDC10-4-D03 or SC10-4-D03-PC) to help test and replace proportional CETOP D03 - available in compensated or non-compensated. Select the robust coil for those extreme environmental conditions - voltage extremes, high temperature, shock & vibration, chemicals, and/or water ingression.

Note: For optimal performance install with the solenoid valve below the tank oil level in the horizontal position, reducing the chance for trapped air in the valve.

SPECIFICATIONS

Rated Pressure*	250 bar [3600 psi]
Maximum Rated Flow at 10 bar [145 psi]	22 l/min [6 US gal/min]
Weight including coil	0.77 kg [1.7 lbs]
Hysteresis	4% maximum
Threshold current	0.5 A (12 VDC coil) 0.25 A (24 VDC coil)
Maximum control current	1.5 A (12 VDC coil) 0.8 A (24 VDC coil)
Cavity	SDC10-4
Standard Coil	M16 26 Watt
Robust Coil	R16 20 Watt Robust Nut P/N 173804910 (no coil O-rings needed)

* Rated Pressure based on NFPA fatigue test standards (at 1 Million Cycles).

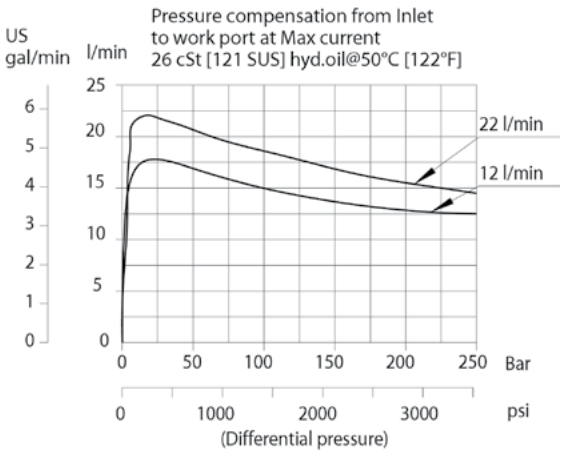

Schematic

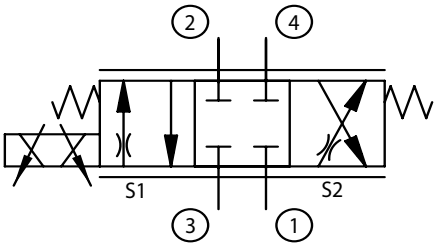

Performance Curves

Operating curves with M16 coil and plastic nut

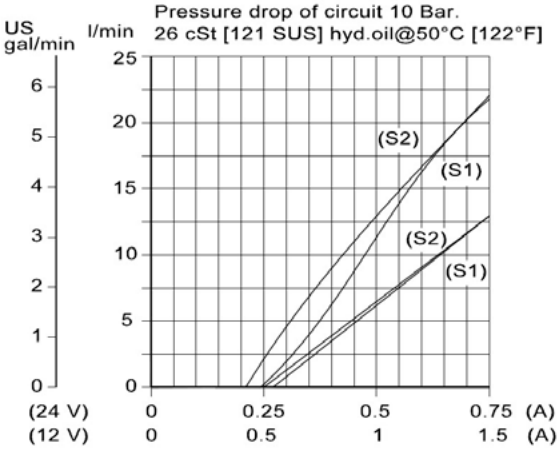

Operating curves with R16 coil and steel nut

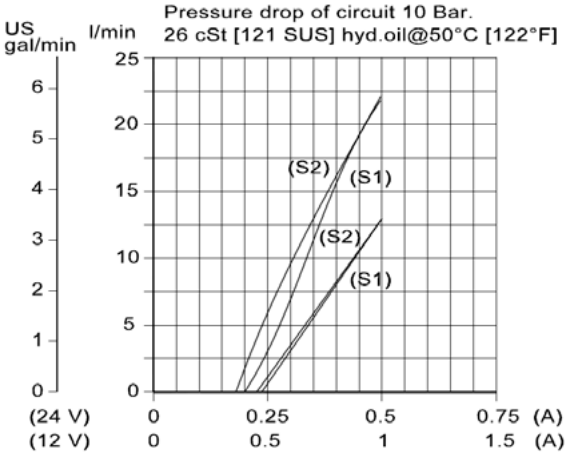

Comatrol
RESPONSIVENESS IN MOTION
Member of the Danfoss Group

Proportional Valves Catalog
Proportional Directional
PSV10-34-02

DIMENSIONS

mm [in]

Cross-sectional view

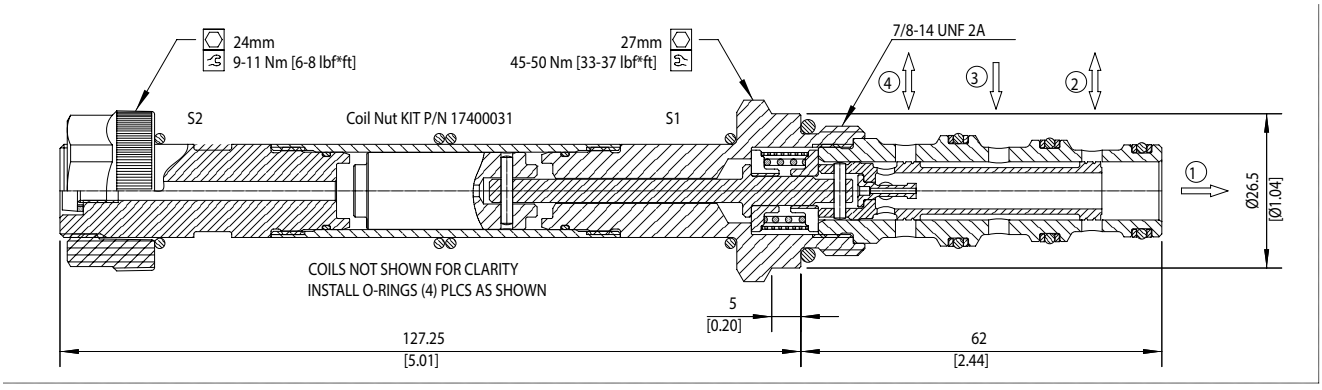

EXAMPLE CIRCUITS

Compensated Bi-directional Proportional Flow Control

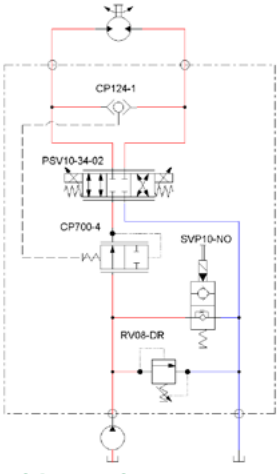

Double Acting Cylinder with Proportional Speed Control, Unloading Valve and Circuit Relief

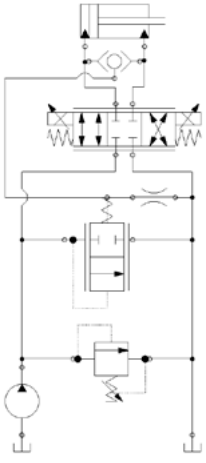

ORDERING INFORMATION

PSV 10 - 34 - 02 - 12D - DE - 22 - B - 00

Proportional Solenoid Valve, Non-compensated Flow Control

Cavity Size:
10 = Size 10

Type
34 = 3 Position, 4 Way

Schematic:
02 = Closed Center Spool

Coil Voltage:
00 = No Coil
12D = 12 VDC
24D = 24 VDC
R12D = 12 VDC R-Coil
R24D = 24 VDC R-Coil

Coil Termination
00 = No coil, with Nut
AJ = AMP Junior*
AS = AMP SuperSeal 1.5
DE = Deutsch
DN = DIN 46650*
FL = Flying Leads
*These terminations are not available on robust coil (R12D, R24D)

Max Regulated Flow:
12 = 12 LPM (3 GPM)
22 = 22 LPM (6 GPM)

Seals:
B = Buna-N
V = Viton

Seal Kit
354001919
354002019

Housing and Ports:
00 = No Housing
L3B = AL 3/8 BSP
L4B = AL, 1/2 BSP
6S = AL #6 SAE
8S = AL, #8 SAE
Other housings available

Housing P/N:
No Housing
SDC10-4-L-3B
SDC10-4-L-4B
CP10-4-6S
CP10-4-8S

Comatrol
RESPONSIVENESS IN MOTION
Member of the Danfoss Group

Proportional Valves Catalog
Proportional Directional
PSV12-34-02

OPERATION
This is a proportional, non-compensated, 3 position 4 way, directional flow control solenoid valve, with closed-center spool.

APPLICATIONS

This is an electro-proportional directional control using a 3-Position, 4-Way design for directional control of hydraulic cylinders and motors. For load-independent flow control, apply with a pressure compensator, like CP701-4 (see Example Circuit). Port 1 should be used as the tank port, with a maximum back-pressure of 150 bar. The highest return flow coming from a cylinder should be connected to Port 2.

Use the available Comatrol Adapter Block (CP12-4-D05 or CP12-4-D05-PC) to help test and replace proportional CETOP D05 - available in compensated or non-compensated.

Note: For optimal performance install with the solenoid valve below the tank oil level in the horizontal position, reducing the chance for trapped air in the valve.

Shown with Deutsch connector

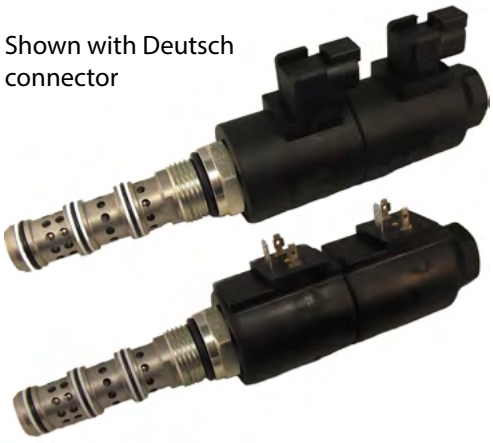

Shown with DIN connector

SPECIFICATIONS

Rated Pressure*	260 bar [3770 psi]
Rated Flow at 10 bar [145 psi]	50 l/min [13 US gal/min]
Weight including coil	1.2 kg [2.64 lbs]
Hysteresis	<4%
Threshold current	0.25 A (12 VDC coil) 0.50 A (24 VDC coil)
Maximum control current	1.8 A (12 VDC coil) 0.9 A (24 VDC coil)
Cavity	CP12-4
Standard Coil	M19 33 Watt

* Rated Pressure based on NFPA fatigue test standards (at 1 Million Cycles).

Schematic

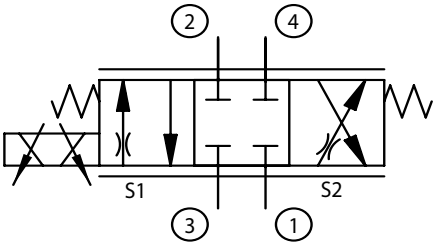

Performance Curves

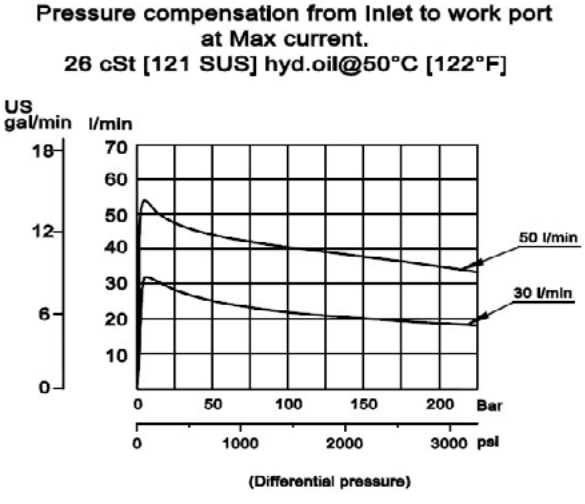

Operating curves with M19 coil and nut.

Curves made with a logic element set at 10 Bar.

26 cSt [121 SUS] hyd.oil@50C [122F]

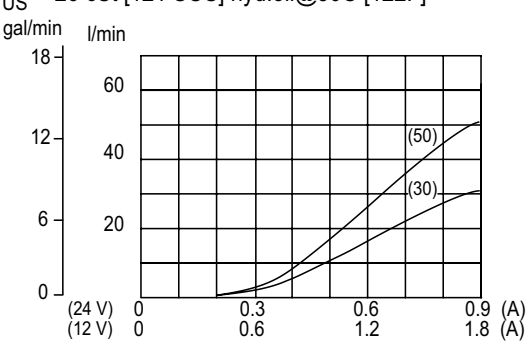

Comatrol
RESPONSIVENESS IN MOTION
Member of the Danfoss Group

Proportional Valves Catalog
Proportional Directional
PSV12-34-02

DIMENSIONS

mm [in]

Cross-sectional view

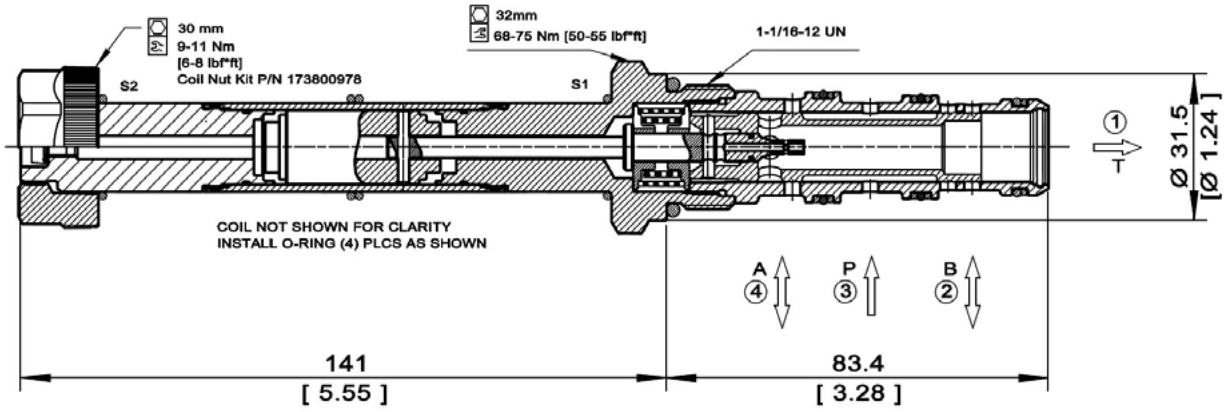

EXAMPLE CIRCUITS

Compensated Bi-directional Proportional Flow Control

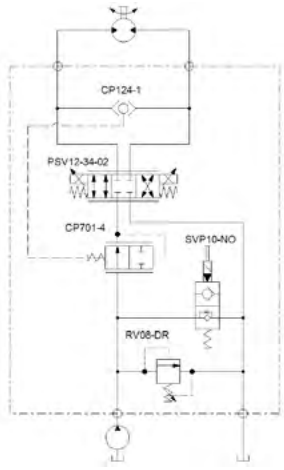

Double Acting Cylinder with Proportional Speed Control, Unloading Valve and Circuit Relief

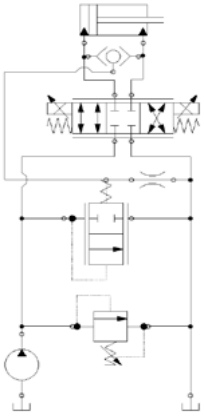

ORDERING INFORMATION

PSV 12 - 34 - 02 - 50 - 12D - DE - B - 00

Proportional Solenoid Valve, Non-compensated, Flow Control

Cavity Size:
12 = Size 12

Type:
34 = 3 Position, 4 Way

Schematic:
02 = Closed Center Spool

Max Regulated Flow:
30 = 30 LPM (8 GPM)
50 = 50 LPM (13 GPM)

Coil Voltage:
00 = No Coil
12D = 12 VDC
24D = 24 VDC

Coil Termination:
00 = No coil, with Nut
AJ = AMP Junior
AS = AMP SuperSeal 1.5
DE = Deutsch
DN = DIN 46650
FL = Flying Leads

Seals:
B = Buna-N
V = Viton

Seal Kits:
11106420
11106444

Housing and Ports:
00 = No Housing
3B = AL, 3/8 BSP
4B = AL, 1/2 BSP
8S = AL, #8 SAE
10S = AL, #10 SAE
*Other housings available

Housing P/N:
No Housing
CP12-4-3B
CP12-4-4B
CP12-4-8S
CP12-4-10S

Comatrol
RESPONSIVENESS IN MOTION
Member of the Danfoss Group

Proportional Valves Catalog
Proportional Directional
PDCV03-3Z11

OPERATION

This valve is a proportional directional control.

SPECIFICATIONS

Rated pressure	350 bar [5075 psi]
Rated flow at 10 bar [145 psi]	30 l/min [8 US gal/min]
Weight	2.40 kg [5.29 lb]
Hysteresis	6% maximum
Threshold current	0.5 A (12 VDC coil) 0.25 A (24 VDC coil)
Maximum control current	2.4 A (12 VDC coil) 1.2 A (24 VDC coil)
Cavity	ISO D03
Standard Coil	PD03 40 Watt
Coil nut	158-8005

Theoretical performance

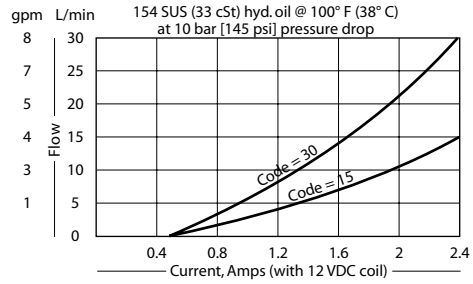

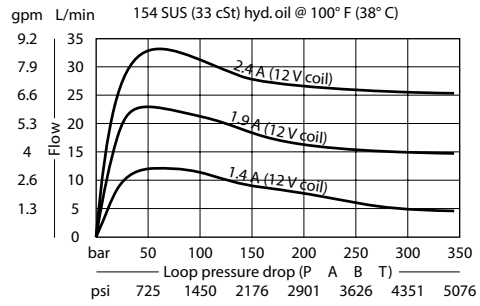

Schematic

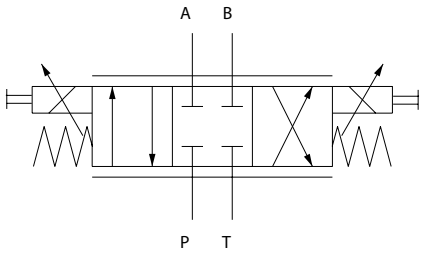

DIMENSIONS

mm [in]

Cross-sectional view

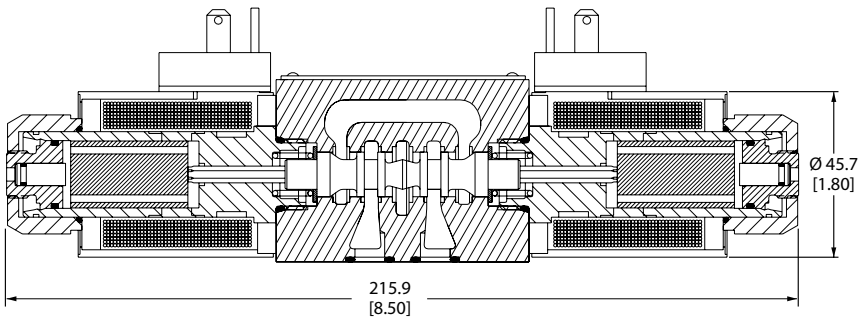

ORDERING INFORMATION

PDCV03-3Z11/15-12-E1-8S

Subplate option
OMIT = No subplate
8S = Aluminum, #8 SAE ports
S8S = Steel, #8 SAE ports

Termination
E1 = DIN 43650
E3 = Amp Jr.
E8 = Lead wires
E12 = Deutsch
E14 = Dual spade

Voltage
12 = 12 VDC
24 = 24 VDC

Nominal flow rate
15 = 15 L/min [4.0 gpm]
30 = 30 L/min [7.9 gpm]

Seal Kit

	Seal kit
B = Buna-N	158-8007
V = Viton	158-8062

Note : All internal seals are viton

Bolt Kit

#10-24 Thd.	158-8064
M5 Thd.	158-8026

Comatrol
RESPONSIVENESS IN MOTION
Member of the Danfoss Group

Proportional Valves Catalog
Proportional Directional
PDCV05-3Z11

OPERATION

This is a non-compensated proportional directional control valve.

SPECIFICATIONS

Rated pressure	350 bar [5075 psi]
Rated Flow at 10 bar [150 psi]	60 l/min [16 US gal/min]
Weight	6.60 kg [14.60 lb]
Hysteresis	6% maximum
Threshold current	0.2 A (12 VDC coil) 0.1 A (24 VDC coil)
Maximum control current	1.8 A (12 VDC coil) 0.9 A (24 VDC coil)
Cavity	ISO D05
Standard Coil	PD05 23 Watt

Theoretical performance

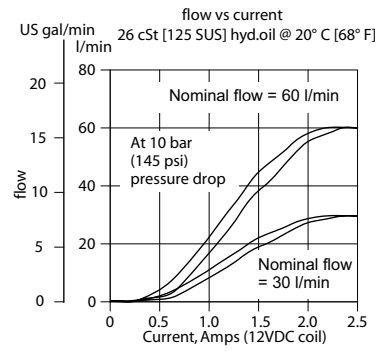

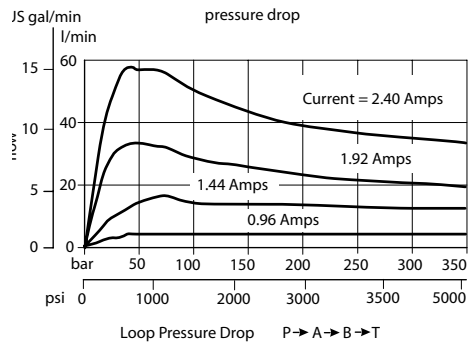

Schematic

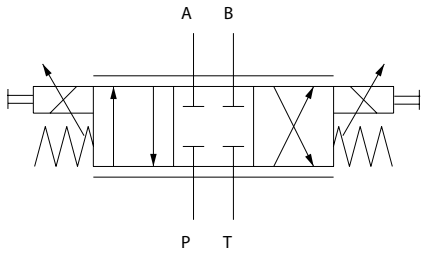

DIMENSIONS

mm [in]

Cross-sectional view

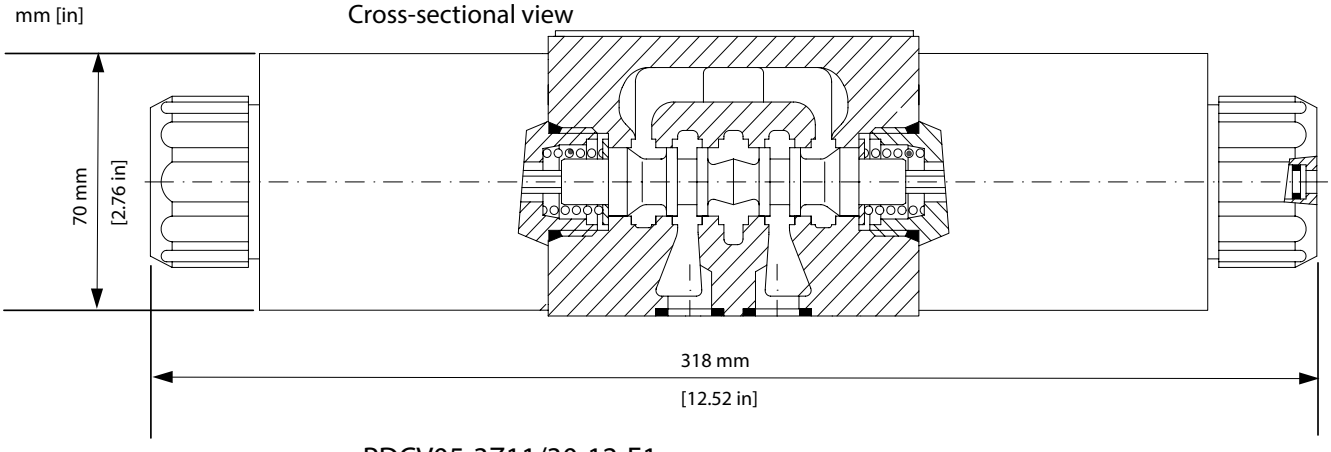

ORDERING INFORMATION

PDCV05-3Z11/30-12-E1

Connector
E1 = DIN 43650
E8 = Lead wires
E10 = Deutsch on leads

Seal kit
B = Buna N 158-8023
V = Viton 158-8094
All internal seals are Viton

Flow rate
30 = 30 l/min [7.9 US gal/min]
60 = 60 l/min [15.8 US gal/min]

Voltage
12 = 12 VDC
24 = 24 VDC

Bolt kit
1/4-20 Thd 158-8095
M6 Thd 158-8024

Comatrol
RESPONSIVENESS IN MOTION
Member of the Danfoss Group

Proportional Valves Catalog
Proportional Directional
PSV10-34-05

Shown with DIN connector, standard coil

Shown with Robust Coil

OPERATION

This is a proportional, non-compensated, 3 position 4 way, directional flow control solenoid valve, with float-center spool.

APPLICATIONS

This is an electro-proportional directional control using a 3-Position, 4-Way design for directional control of hydraulic cylinders and motors. For load-independent flow control, apply with a pressure compensator, like CP700-4 (see Example Circuit). Port 1 should be used as the tank port, with a maximum back-pressure of 150 bar. The highest return flow coming from a cylinder should be connected to Port 2.

Use the available Comatrol Adapter Block (SDC10-4-D03 or SC10-4-D03-PC) to help test and replace proportional CETOP D03 - available in compensated or non-compensated. Select the robust coil for those extreme environmental conditions - voltage extremes, high temperature, shock & vibration, chemicals, and/or water ingression.

Note: For optimal performance install with the solenoid valve below the tank oil level in the horizontal position, reducing the chance for trapped air in the valve.

SPECIFICATIONS

Rated Pressure*	250 bar [3600 psi]
Maximum Rated Flow at 10 bar [145 psi]	22 l/min [6 US gal/min]
Weight including coil	0.77 kg [1.7 lbs]
Hysteresis	4% maximum
Threshold current	0.5 A (12 VDC coil) 0.25 A (24 VDC coil)
Maximum control current	1.5 A (12 VDC coil) 0.8 A (24 VDC coil)
Cavity	SDC10-4
Standard Coil	M16 26 Watt
Robust Coil	R16 20 Watt Robust Nut P/N 173804910 (no coil O-rings needed)

* Rated Pressure based on NFPA fatigue test standards (at 1 Million Cycles).

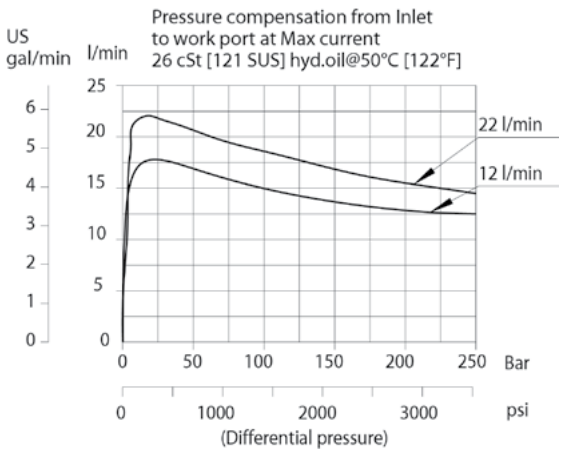

Schematic

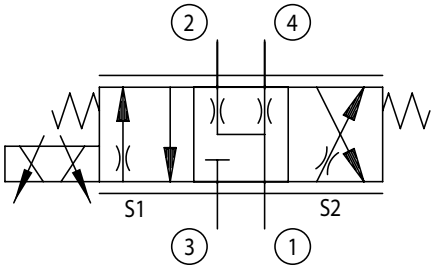

Performance Curves

Operating curves with M16 coil and plastic nut

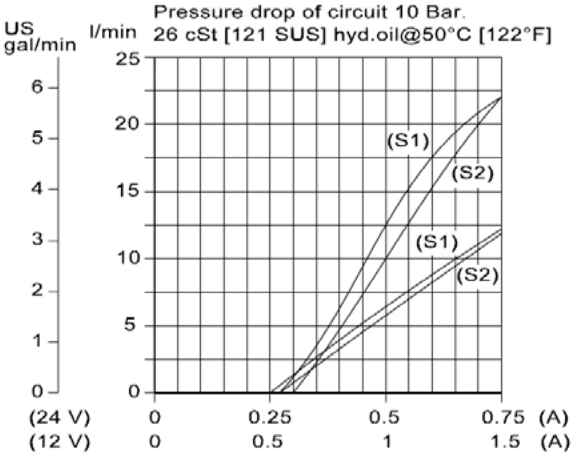

Operating curves with R16 coil and steel nut

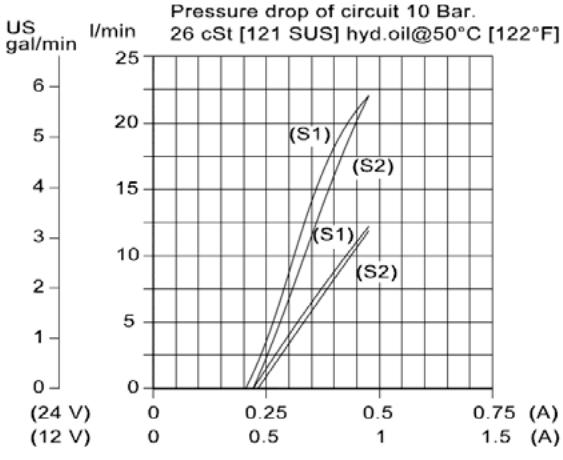

Comatrol
RESPONSIVENESS IN MOTION
Member of the Danfoss Group

Proportional Valves Catalog
Proportional Directional
PSV10-34-05

DIMENSIONS

mm [in]

Cross-sectional view

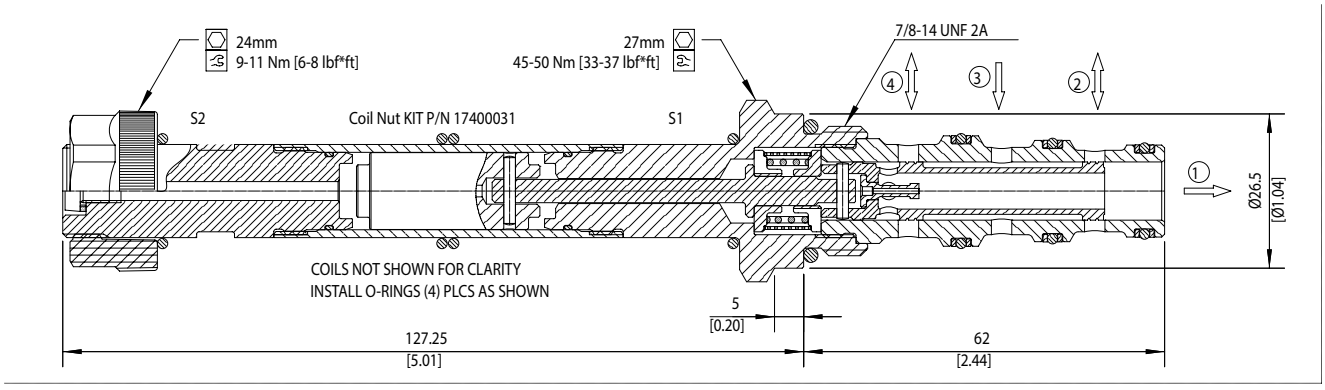

EXAMPLE CIRCUITS

Compensated Bi-directional Proportional Flow Control

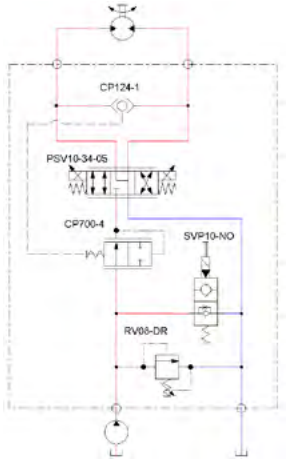

Double Acting Cylinder with Proportional Speed Control and Load Holding

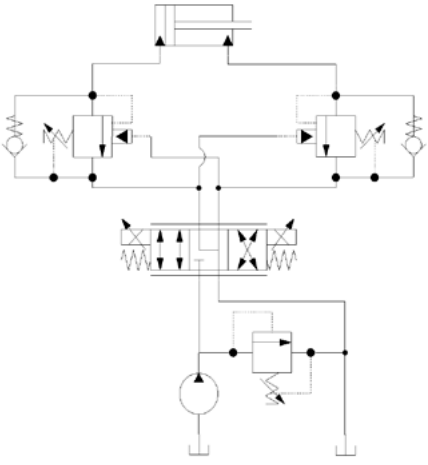

ORDERING INFORMATION

PSV 10 - 34 - 05 - 12D - DE - 22 - B - 00

Proportional Solenoid Valve, Non-compensated Flow Control

Cavity Size:
10 = Size 10

Type
34 = 3 Position, 4 Way

Schematic:
05 = Float Center Spool

Coil Voltage:
00 = No Coil
12D = 12 VDC
24D = 24 VDC
R12D = 12 VDC R-Coil
R24D = 24 VDC R-Coil

Coil Termination
00 = No coil, with Nut
AJ = AMP Junior
AS = AMP SuperSeal 1.5
DE = Deutsch
DN = DIN 46650
FL = Flying Leads

Max Regulated Flow:
3 = 3 LPM (0.8 GPM)
12 = 12 LPM (3 GPM)
22 = 22 LPM (6 GPM)

Seals:
B = Buna-N
V = Viton

Seal Kit
354001919
354002019

Housing and Ports:
00 = No Housing
L3B = AL 3/8 BSP
L4B = AL, 1/2 BSP
6S = AL #6 SAE
8S = AL, #8 SAE
Other housings available

Housing P/N:
No Housing
SDC10-4-L-3B
SDC10-4-L-4B
CP10-4-6S
CP10-4-8S

Comatrol
RESPONSIVENESS IN MOTION
Member of the Danfoss Group

Proportional Valves Catalog
Proportional Directional
PSV12-34-05

OPERATION

This is a proportional, non-compensated, 3 position 4 way, directional flow control solenoid valve, with float-center spool.

APPLICATIONS

This is an electro-proportional directional control using a 3-Position, 4-Way design for directional control of hydraulic cylinders and motors. For load-independent flow control, apply with a pressure compensator, like CP701-4 (see Example Circuit). Port 1 should be used as the tank port, with a maximum back-pressure of 150 bar. The highest return flow coming from a cylinder should be connected to Port 2.

Use the available Comatrol Adapter Block (CP12-4-D05 or CP12-4-D05-PC) to help test and replace proportional CETOP D05 - available in compensated or non-compensated.

Note: For optimal performance install with the solenoid valve below the tank oil level in the horizontal position, reducing the chance for trapped air in the valve.

Shown with Deutsch connector

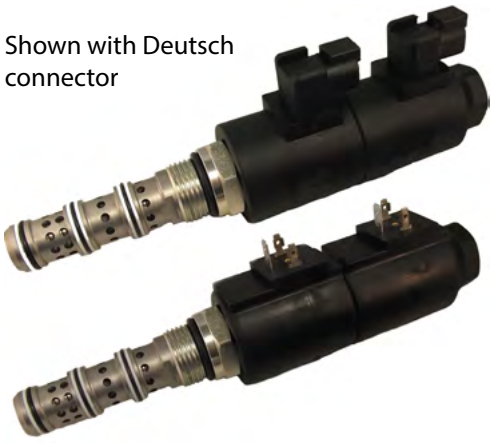

Shown with DIN connector

SPECIFICATIONS

Rated Pressure*	260 bar [3770 psi]
Maximum Rated Flow at 10 bar [145 psi]	60 l/min [16 US gal/min]
Weight including coil	1.2 kg [2.64 lbs]
Hysteresis	4% maximum
Threshold current	0.5 A (12 VDC coil) 0.25 A (24 VDC coil)
Maximum control current	1.8 A (12 VDC coil) 0.9 A (24 VDC coil)
Cavity	CP12-4
Standard Coil	M19 33 Watt

* Rated Pressure based on NFPA fatigue test standards (at 1 Million Cycles).

Schematic

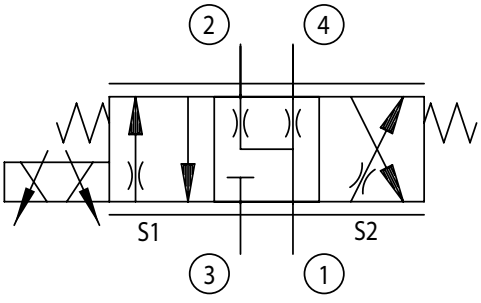

Performance Curves

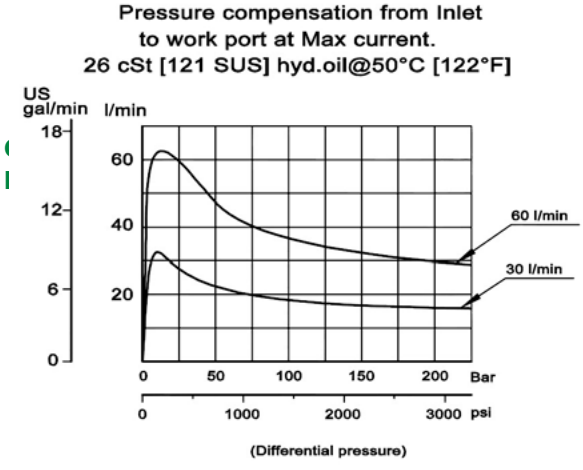

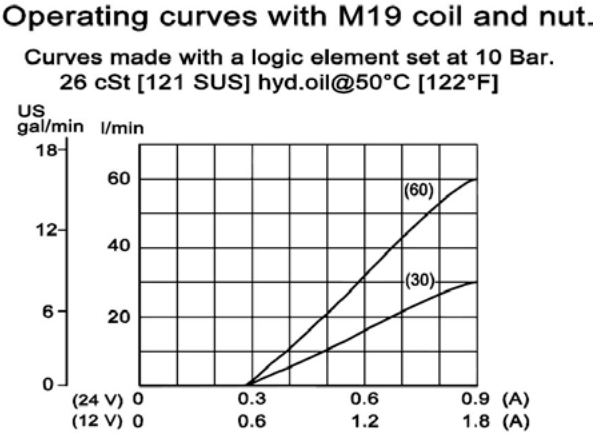

Comatrol
RESPONSIVENESS IN MOTION
Member of the Danfoss Group

Proportional Valves Catalog
Proportional Directional
PSV12-34-05

DIMENSIONS

mm [in]

Cross-sectional view

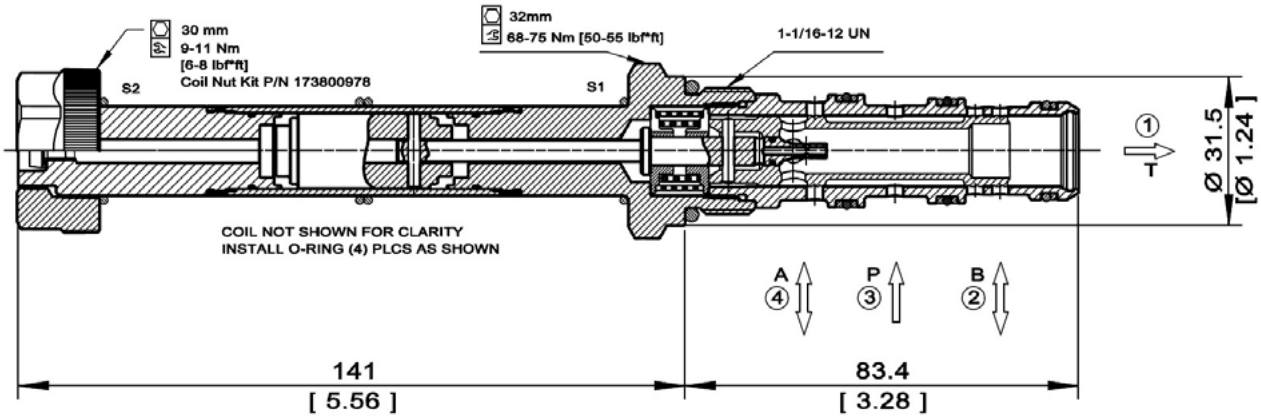

EXAMPLE CIRCUITS

Compensated Bi-directional Proportional Flow Control

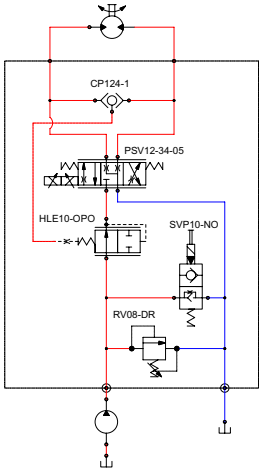

Double Acting Cylinder with Proportional Speed Control and Load Holding

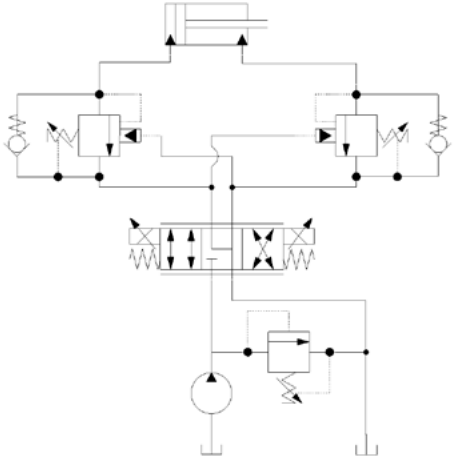

ORDERING INFORMATION

PSV 12 - 34 - 05 - 60 - 12D - DE - B - 00

Proportional Solenoid Valve, Non-compensated Flow Control

Cavity Size:
12 = Size 12

Type:
34 = 3 Position, 4 Way

Schematic:
05 = Float Center Spool

Max Regulated Flow:
30 = 30 LPM (8 GPM)
60 = 60 LPM (16 GPM)

Coil Voltage:
00 = No Coil
12D = 12 VDC
24D = 24 VDC

Coil Termination:
00 = No coil, with Nut
AJ = AMP Junior
AS = AMP SuperSeal 1.5
DE = Deutsch
DN = DIN 46650
FL = Flying Leads

Seals:
B = Buna-N
V = Viton

Seal Kits:
11106420
11106444

Housing and Ports:
00 = No Housing
3B = AL, 3/8 BSP
4B = AL, 1/2 BSP
8S = AL, #8 SAE
10S = AL, #10 SAE
*Other housings available

Housing P/N:
No Housing
CP12-4-3B
CP12-4-4B
CP12-4-8S
CP12-4-10S

Comatrol
RESPONSIVENESS IN MOTION
Member of the Danfoss Group

Proportional Valves Catalog
Proportional Directional
PDCV03-3Y11

OPERATION

This valve is a proportional directional control.

SPECIFICATIONS

Rated pressure	350 bar [5075 psi]
Rated Flow at 10 bar [145 psi]	30 l/min [8 US gal/min]
Weight	2.40 kg [5.29 lb]
Hysteresis	6% maximum
Threshold current	0.5 A (12 VDC coil) 0.25 A (24 VDC coil)
Maximum control current	2.4 A (12 VDC coil) 1.2 A (24 VDC coil)
Cavity	ISO D03
Standard Coil	PD03 40 Watt
Coil nut	158-8005

Theoretical performance

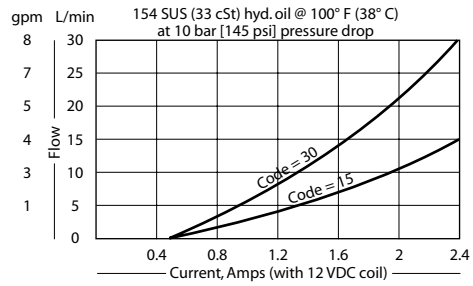

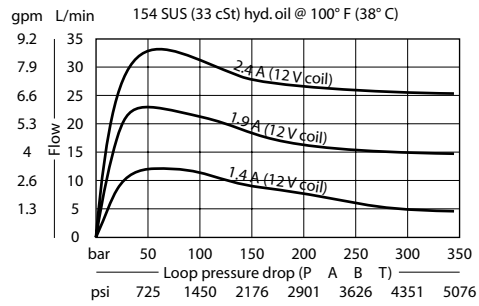

Schematic

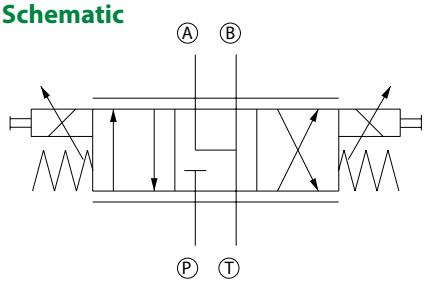

Cross-sectional view

DIMENSIONS

mm [in]

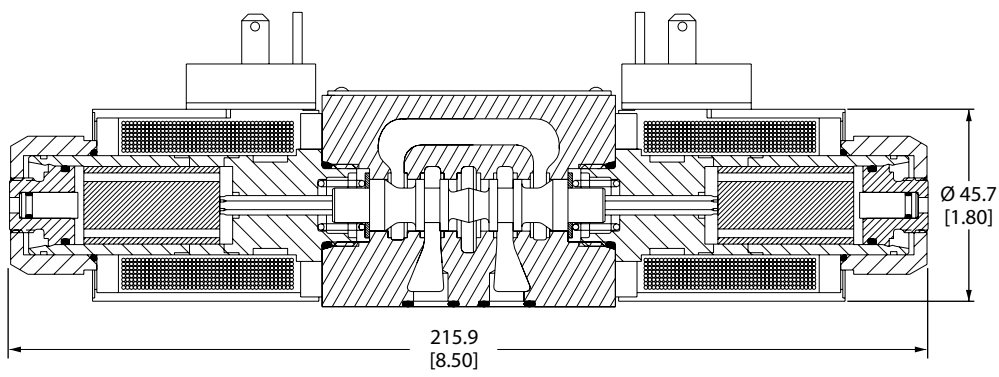

ORDERING INFORMATION

PDCV03-3Y11/15-12-E1-8S

Subplate option
OMIT = No subplate
8S = Aluminum, #8 SAE ports
S8S = Steel, #8 SAE ports

Termination
E1 = DIN 43650
E3 = Amp Jr.
E8 = Lead wires
E12 = Deutsch
E14 = Dual spade

Voltage
12 = 12 VDC
24 = 24 VDC

Nominal flow rate
15 = 15 L/min [4.0 gpm]
30 = 30 L/min [7.9 gpm]

Seal Kit

	Seal kit
B = Buna-N	158-8007
V = Viton	158-80062

Note : All internal seals are viton

Bolt Kit

#10-24 Thd.	158-8064
M5 Thd.	158-8026

Comatrol
RESPONSIVENESS IN MOTION
Member of the Danfoss Group

Proportional Valves Catalog
Proportional Directional
PDCV05-3Y11

OPERATION

This is a non-compensated proportional directional control valve.

SPECIFICATIONS

Rated pressure	350 bar [5075 psi]
Rated Flow at 10 bar [150 psi]	60 l/min [16 US gal/min]
Weight	6.60 kg [14.60 lb]
Hysteresis	6% maximum
Threshold current	0.2 A (12 VDC coil) 0.1 A (24 VDC coil)
Maximum control current	1.8 A (12 VDC coil) 0.9 A (24 VDC coil)
Cavity	ISO D05
Standard Coil	PD05 23 Watt

Theoretical performance

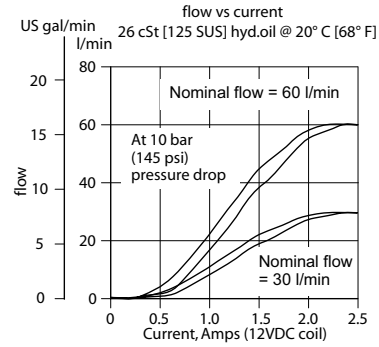

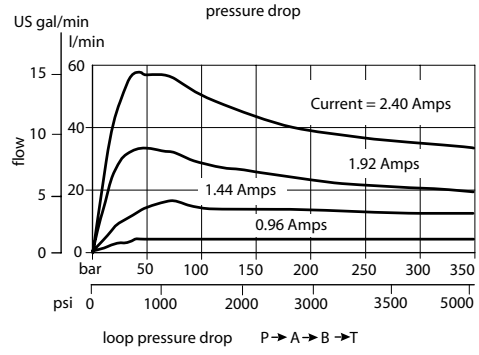

Schematic

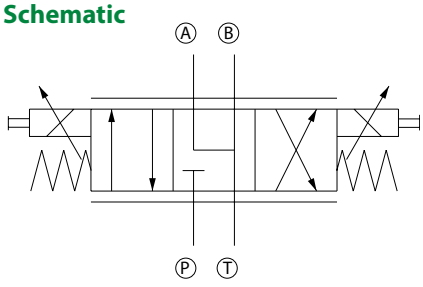

Cross-sectional view

DIMENSIONS

mm [in]

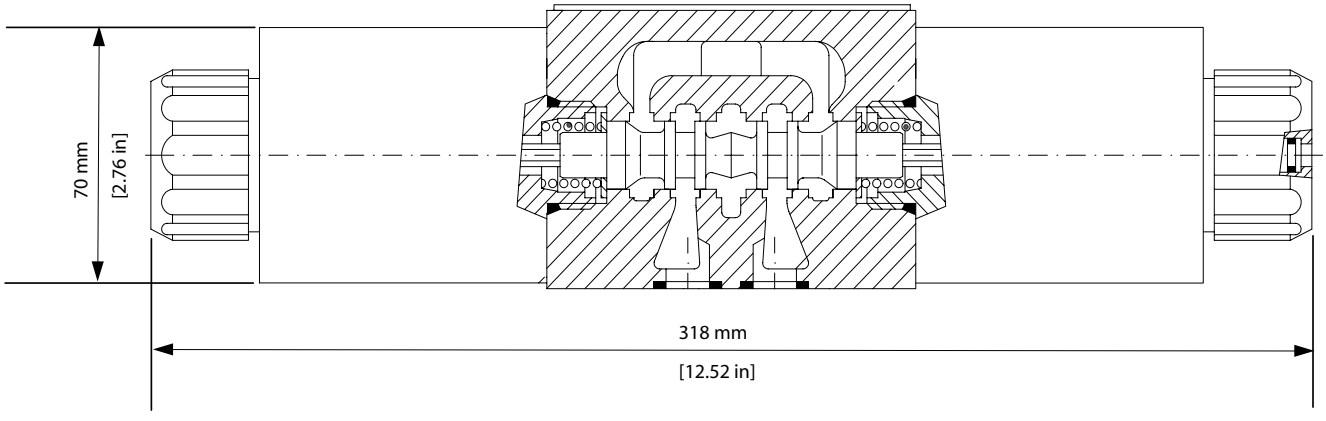

ORDERING INFORMATION

P-DCV05-3Y11/30-12-E1

Connector
E1 = DIN 43650
E8 = Lead wires
E10 = Deutsch on leads

Seal kit
B = Buna N 158-8023
V = Viton 158-8094
All internal seals are Viton

Nominal flow rate
30 = 30 l/min [7.9 US gal/min]
60 = 60 l/min [15.8 US gal/min]

Voltage
12 = 12 VDC
24 = 24 VDC

Bolt kit
1/4-20 Thd 158-8093
M6 Thd 158-8024

Comatrol
RESPONSIVENESS IN MOTION
Member of the Danfoss Group

Proportional Valves Catalog
Flow Controls, Non-Compensated, Normally Closed
CP518-PNC

OPERATION

This valve is a non-compensated, normally-closed, proportional flow control.

SPECIFICATIONS

Rated pressure	210 bar [3000 psi]
Rated flow at 6 bar [80 psi]	12 l/min [3 US gal/min]
Weight	0.36 kg [0.80 lb]
Hysteresis	10% maximum
Threshold current	0.8 A (12 VDC coil) 0.4 A (24 VDC coil)
Maximum control current	1.8 A (12 VDC coil) 0.9 A (24 VDC coil)
Pressure differential	21 bar [300 psi] maximum
Cavity	SDC08-2
Standard Coil	M19P 22 Watt
Coil nut	173802114

Theoretical performance

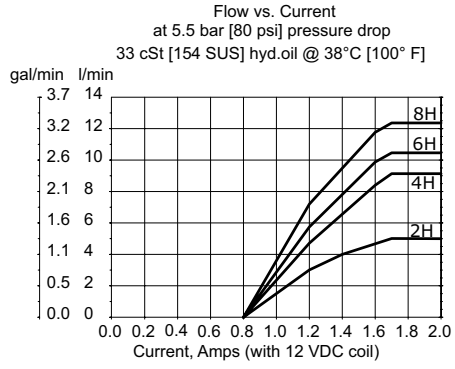

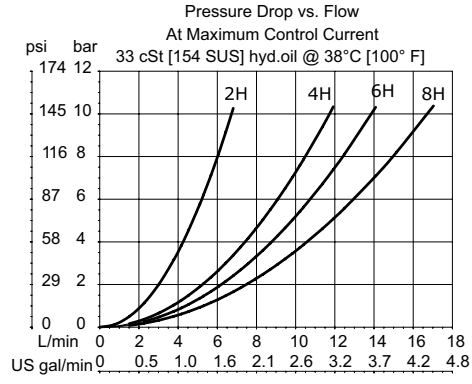

Schematic

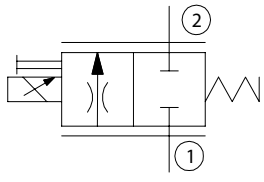

DIMENSIONS

mm [in]

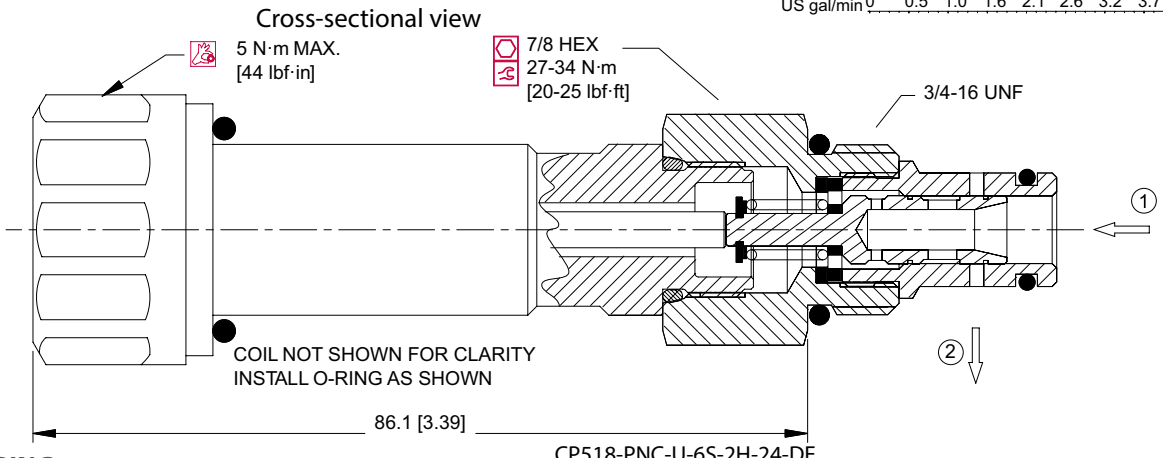

ORDERING INFORMATION

CP518-PNC-U-6S-2H-24-DE

Termination
00 = No connector
DE = Deutsch
DN = DIN 43650
FL = Lead wires
AJ = AMP Jr

Voltage
00 = No coil
12 = 12 VDC
24 = 24 VDC

Seals
U = Urethane
Seal kits
120591

Flow code
2H = 5 l/min [1.3 US gal/min] at 5.5 bar [80 psi]
4H = 9 l/min [2.4 US gal/min]
6H = 11 l/min [2.9 US gal/min]
8H = 13 l/min [3.4 US gal/min]

Housing P/N
No Housing
CP08-2-4S
CP08-2-6S
SDC08-2-DG-2B
SDC08-2-DG-3B

Housing and ports
0 = Cartridge only
4S = AL, #4 SAE
6S = AL, #6 SAE
2B = AL, 1/4 BSP
3B = AL, 3/8 BSP

Comatrol
RESPONSIVENESS IN MOTION
Member of the Danfoss Group

Proportional Valves Catalog
Flow Control, Non-Compensated, Normally Closed
PSV10-NC

OPERATION

This is a normally-closed, direct-acting, spool-type, non-compensated, proportional flow-control. Controlled flow is from port 1 to 2.

SPECIFICATIONS

Rated pressure	260 bar [3770 psi]
Maximum flow at 10 bar [145 psi pressure drop]	PSV10-NC-10: 10 l/min [2.64 US gal/min] PSV10-NC-25: 25 l/min [6.6 US gal/min] PSV10-NC-40: 40 l/min [10.6 US gal/min]
Leakage	420 cm^3/min [25.6 in^3/min] @ rated pressure
Weight	0.51 kg [1.12 lb]
Hysteresis	5% maximum
Threshold current	0.4 A (12 VDC coil) 0.2 A (24 VDC coil)
Maximum control current	1.8 A (12 VDC coil) 0.9 A (24 VDC coil)
Cavity	SDC10-2
Standard Coil	M19P 22 Watt

Theoretical performance

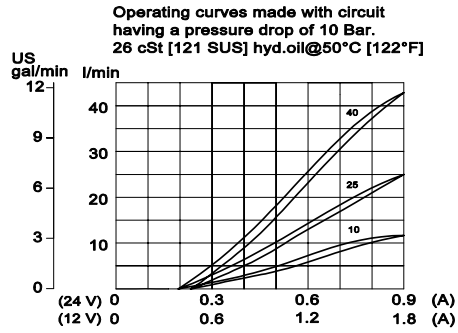

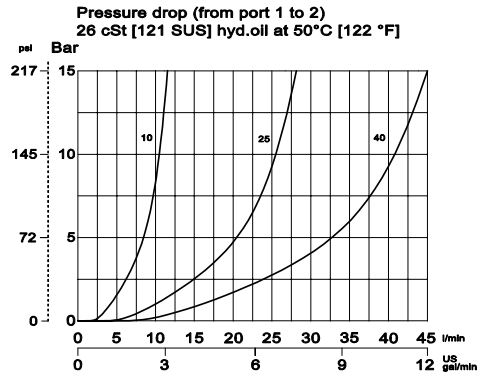

Schematic

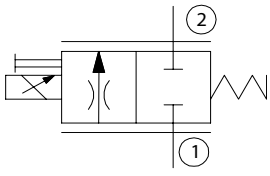

DIMENSIONS

mm [in]

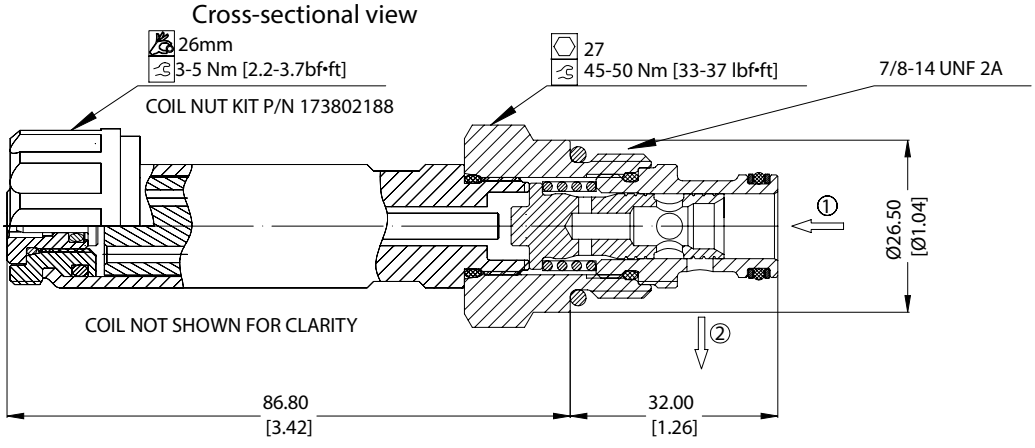

ORDERING INFORMATION

PSV10 – NC – 40 – 12D – DE – SPS – B - 00

Proportional Flow Control Valve, Non-Compensated, Normally Closed, 10 Size Cavity

Code	Max regulated flow
10	10 l/m
25	25 l/m
40	40 l/m

Code	Coil Voltage
00	No Coil
12D	12V DC
24D	24 V DC

Code	Coil Termination
00	No Coil
AJ	Amp Junior
DE	Deutsch
DN	DIN 43650

Code*	Manual Override
Omit	Push Pin (Standard)
SPS	Screw Style (Push-Type Valve)

* PB (Push-Button) available upon request

Code	Seal	Seal Kit
B	Buna-N	35400401
V	Viton	35400341

Body & Ports	Body Nomenclature
00 = No housing	No Body
6S = AI, #6 SAE	CP10-2-6S
8S = AI, #8 SAE	CP10-2-8S
DG3B = AI, 3/8 BSP	SDC10-2-DG3B
DG4B = AI, 1/2 BSP	SDC10-2-DG4B
Other housings available	

Comatrol
RESPONSIVENESS IN MOTION
Member of the Danfoss Group

Proportional Valves Catalog
Flow Control, Non-Compensated, Normally Closed
PSV12-NC

OPERATION

This is a normally-closed, direct-acting, spool-type, non-compensated, proportional flow-control. Controlled flow is from port 1 to 2.

SPECIFICATIONS

Rated pressure	260 bar {3770 psi]
Maximum flow at 10 bar [145 psi]	PSV12-NC-60: 60 l/min [15.85 US gal/min] PSV12-NC-80: 80 l/min [21.13 US gal/min]
Leakage	420 cm^3/min [25.6 in^3/min] @ rated pressure
Weight	0.76 kg [1.68 lb]
Hysteresis	5% maximum
Threshold current	0.5 A (12 VDC coil) 0.25 A (24 VDC coil)
Maximum control current	1.8 A (12 VDC coil) 0.9 A (24 VDC coil)
Cavity	SDC12-2
Standard Coil	D14E(35W) 35 Watt

Theoretical performance

Operating curves made with circuit having a pressure drop of 10 Bar.
26 cSt [121 SUS] hyd.oil@50°C [122°F]

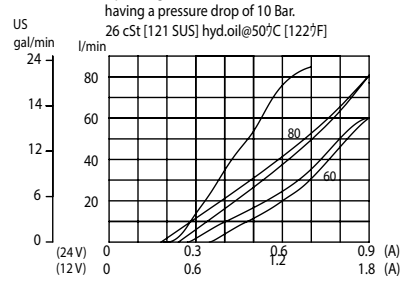

Pressure drop (from port 1 to 2)
26 cSt [121 SUS] hyd.oil@50°C [122°F]

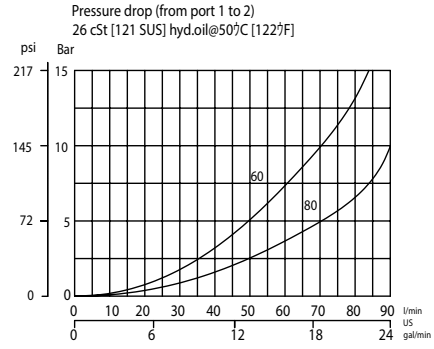

Schematic

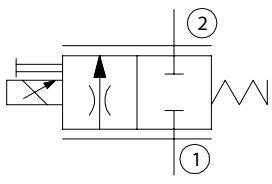

DIMENSIONS

mm [in]

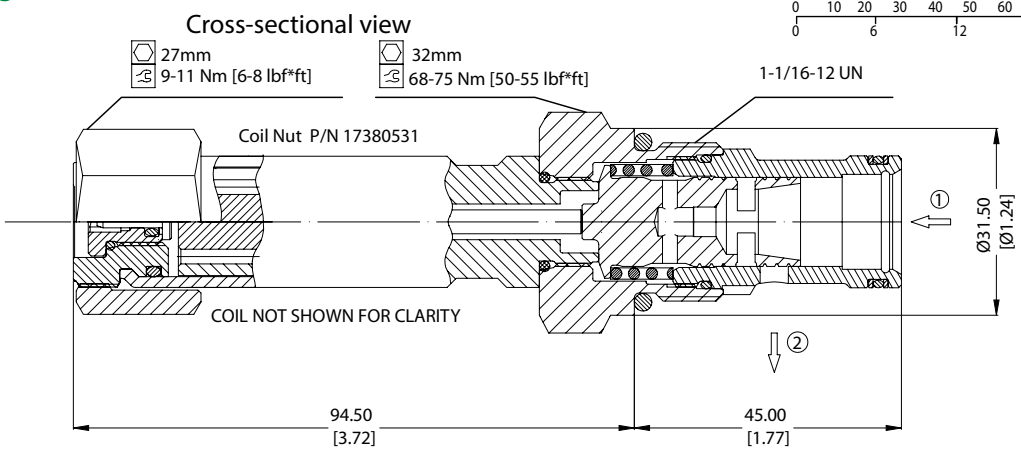

ORDERING INFORMATION

PSV12 – NC – 80 – 12D – DE – SPS – B – 00

Proportional Flow Control Valve, Non-Compensated, Normally Closed, 12 Size Cavity

Code	Max regulated flow
60	60 l/m
80	80 l/m

Code	Coil Voltage
00	No Coil
12D	12V DC
24D	24 V DC

Code	Coil Termination
00	No Coil
AJ	Amp Junior
DE	Deutsch
DN	DIN 43650

Code*	Manual Override
Omit	Push Pin (Standard)
SPS	Screw Style (Push-Type Valve)

*PB (Push-Button) available upon request

Code	Seal	Seal Kit
B	Buna-N	354008319
V	Viton	354008419

Body & Ports	Body Nomenclature
00 = No housing	No Body
10S = Al, #6 SAE	CP12-2-10S
12S = Al, #8 SAE	CP12-2-12S
DG4B = Al, 1/2 BSP	SDC12-2-DG4B
DG6B = Al, 3/4 BSP	SDC12-2-DG6B
Other housings available	

Comatrol
RESPONSIVENESS IN MOTION
Member of the Danfoss Group

Proportional Valves Catalog

Flow Control, Non-Compensated, Normally Closed

PSV16-NC

OPERATION

This is a normally-closed, direct-acting, spool-type, non-compensated, proportional flow-control. Controlled flow is from port 1 to 2.

SPECIFICATIONS

Rated pressure	260 bar [3770 psi]
Rated flow at 10 bar [145 psi]	100 l/min [26 US gal/min]
Leakage	420 cm^3/min [25.6 in^3/min] @ rated pressure
Weight	0.87 kg [1.92 lb]
Hysteresis	5% maximum
Threshold current	0.5 A (12 VDC coil) 0.25 A (24 VDC coil)
Maximum control current	1.8 A (12 VDC coil) 0.9 A (24 VDC coil)
Cavity	SDC16-2
Standard Coil	D14E(35W) 35 Watt

Theoretical performance

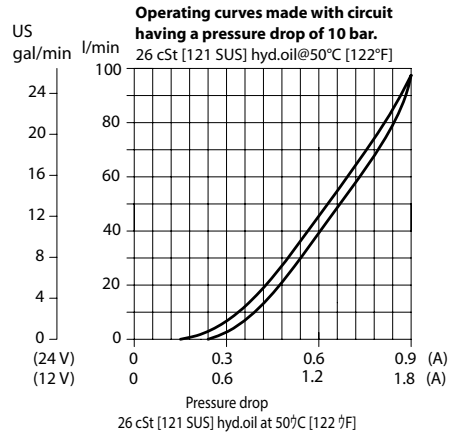

Schematic

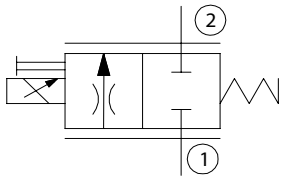

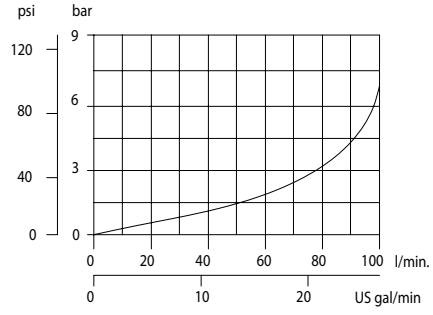

DIMENSIONS

mm [in]

Cross-sectional view

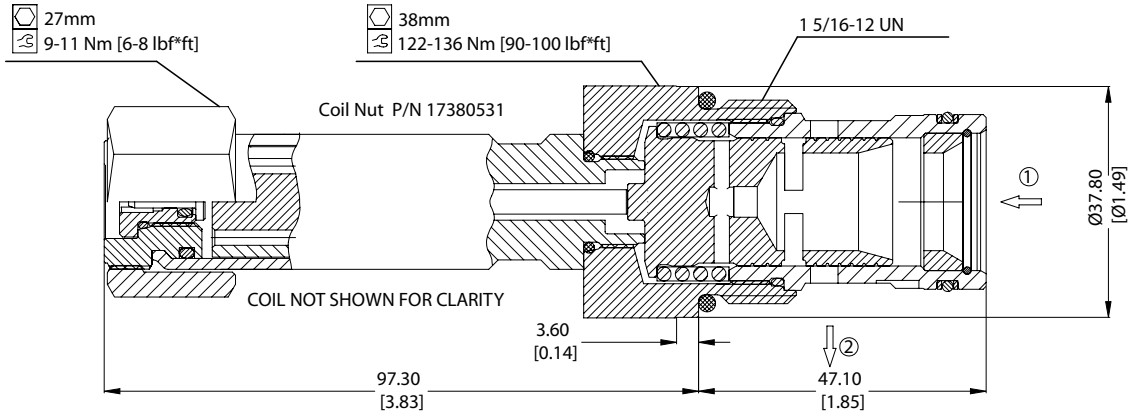

ORDERING INFORMATION

PSV16 – NC – 100 – 12D – DN – SPS – B – 00

Proportional Flow Control Valve, Non-Compensated, Normally Closed, 16 Size Cavity

Code	Max regulated flow
100	100 l/m

Code	Coil Voltage
00	No Coil
12D	12V DC
24D	24 V DC

Code	Coil Termination
00	No Coil
AJ	Amp Junior
DE	Deutsch
DN	DIN 43650

Code*	Manual Override
Omit	Push Pin (Standard)
SPS	Screw Style (Push-Type Valve)

*PB (Push-Button) available upon request

Code	Seal	Seal Kit
B	Buna-N	354008719
V	Viton	354008819

Body & Ports	Body Nomenclature
00 = No housing	No Body
DG6B = Al, 3/4 BSP	SDC16-2-DG-6B
DG8B = Al, 1 BSP	SDC16-2-DG-8B
12S = Al, #12 SAE	CP16-2-12S
16S = Al, #16 SAE	CP16-2-16S
Other housings available	

Comatrol
RESPONSIVENESS IN MOTION
Member of the Danfoss Group

Proportional Valves Catalog

Flow Control, Non-Compensated, Normally Closed, Poppet Type

PSVP10-NCR

OPERATION

This is a non-compensated, normally-closed, pilot-operated, poppet-type, proportional flow-control. Controlled flow is from port 2 to 1.

SPECIFICATIONS

Rated pressure	260 bar [3770 psi]
Rated flow at 10 bar [150 psi]	55 l/min [14 US gal/min]
Leakage	6 drops/min @ rated pressure
Weight	0.54 kg [1.19 lb]
Hysteresis	8% maximum
Threshold current	0.8 A (12 VDC coil) 0.4 A (24 VDC coil)
Maximum control current	1.8 A (12 VDC coil) 0.9 A (24 VDC coil)
Cavity	SDC10-2
Standard Coil	M19P 22 Watt

Theoretical performance

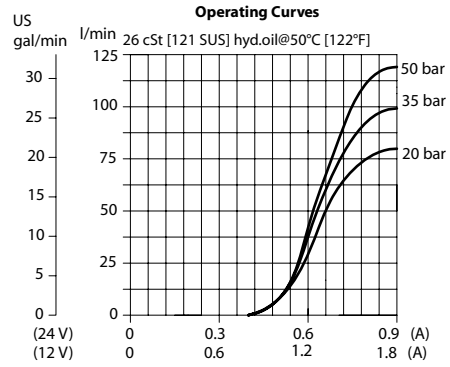

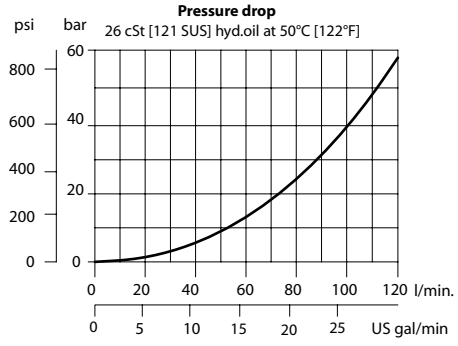

Schematic

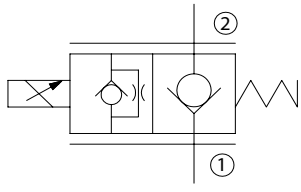

DIMENSIONS

mm in

Cross-sectional view

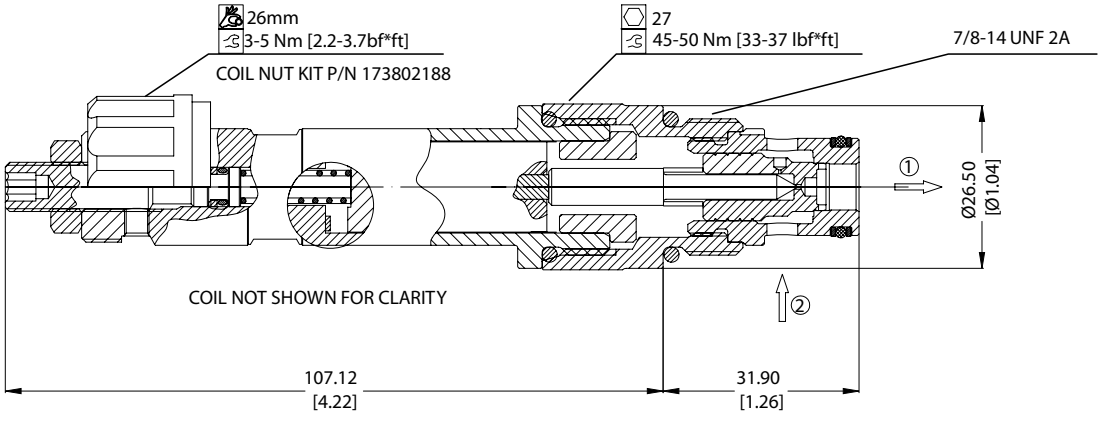

ORDERING INFORMATION

PSVP10 – NCR – 12D – DE – B – 00

Proportional Flow Control Valve, Non-Compensated, Poppet Type, Normally Closed, Free Reverse Flow, 10 Size Cavity

Code	Coil Voltage
00	No Coil
12D	12V DC
24D	24 V DC

Code	Coil Termination
00	No Coil
AJ	Amp Junior
DE	Deutsch
DN	DIN 43650

Code	Seal	Seal Kit
B	Buna-N	354004019
V	Viton	354003419

Body & Ports	Body Nomenclature
00 = No housing	No Body
6S = AI, #6 SAE	CP10-2-6S
8S = AI, #8 SAE	CP10-2-8S
DG3B = AI, 3/8 BSP	SDC10-2-DG3B
DG4B = AI, 1/2 BSP	SDC10-2-DG4B
Other housings available	

Comatrol
RESPONSIVENESS IN MOTION
Member of the Danfoss Group

Proportional Valves Catalog

Flow Control, Non-Compensated, Normally Closed, Poppet Type

PSVP12-NCR

OPERATION

This is a non-compensated, normally-closed, pilot-operated, poppet-type, proportional flow-control. Controlled flow is from port 2 to 1.

SPECIFICATIONS

Rated pressure	260 bar [3770 psi]
Rated flow at 10 bar [150 psi]	70 l/min [18 US gal/min]
Leakage	6 drops/min @ rated pressure
Weight	0.60 kg [1.32 lb]
Hysteresis	8% maximum
Cavity	SDC12-2
Standard Coil	M19P 22 Watt

Theoretical performance

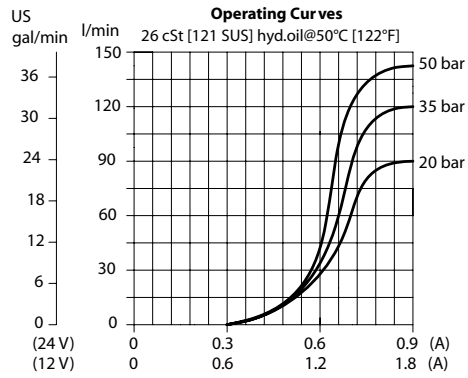

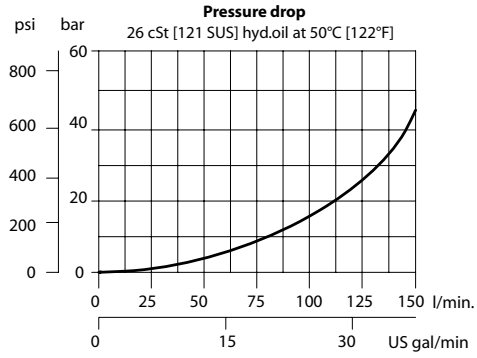

Schematic

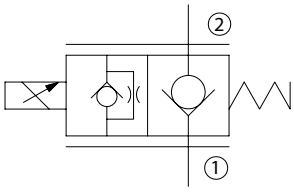

DIMENSIONS

mm [in]

Cross-sectional view

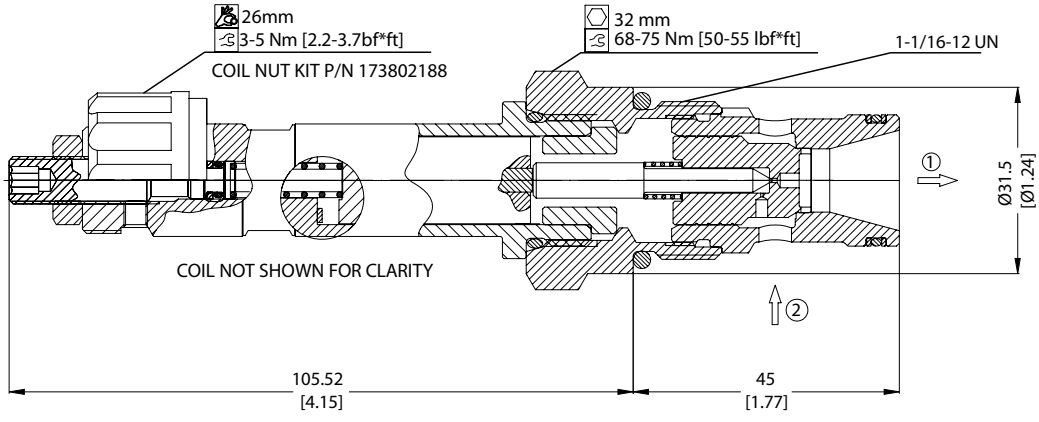

ORDERING INFORMATION

PSVP12 – NCR – 12D – DE – B – 00

Proportional Flow Control Valve, Non-Compensated, Poppet Type, Normally Closed, Free Reverse Flow, 12 Size Cavity

Code	Seal	Seal Kit
B	Buna-N	354008319
V	Viton	354008419

Code	Coil Voltage
00	No Coil
12D	12V DC
24D	24 V DC

Code	Coil Termination
00	No Coil
AJ	Amp Junior
DE	Deutsch
DN	DIN 43650

Body & Ports	Body Nomenclature
00 = No housing	No Body
10S = AI, #10 SAE	CP12-2-10S
12S = AI, #12 SAE	CP12-2-12S
DG4B = AI, 1/2 BSP	SDC12-2-DG4B
DG6B = AI, 3/4 BSP	SDC12-2-DG6B
Other housings available	

Comatrol
RESPONSIVENESS IN MOTION
Member of the Danfoss Group

Proportional Valves Catalog

Flow Control, Non-Compensated, Normally Closed, Poppet Type

PSVP16-NCR

OPERATION

This is a non-compensated, normally-closed, pilot-operated, poppet-type, proportional flow-control. Controlled flow is from port 2 to 1.

SPECIFICATIONS

Rated pressure	260 bar [3770 psi]
Rated flow at 10 bar [150 psi]	90 l/min [24 US gal/min]
Leakage	6 drops/min @ rated pressure
Weight	0.85 kg [1.87 lb]
Hysteresis	8% maximum
Cavity	SDC16-2
Standard Coil	M19P 22 Watt

Theoretical performance

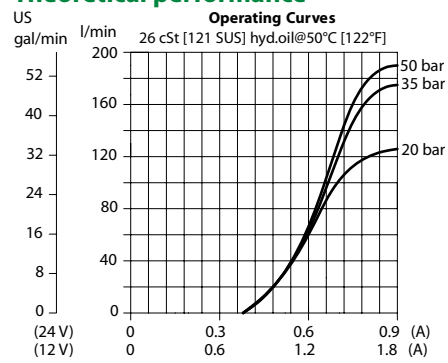

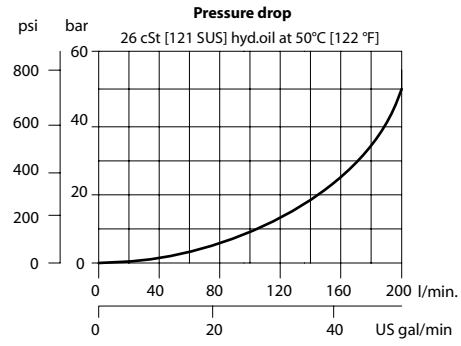

Schematic

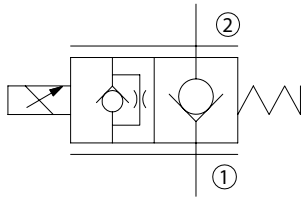

DIMENSIONS

mm [in]

26mm
3-5 Nm [2.2-3.7bf*ft]

COIL NUT KIT P/N 173802188

Cross-sectional view

38mm
122-136 Nm [90-100 lbf*ft]

1 5/16-12 UN

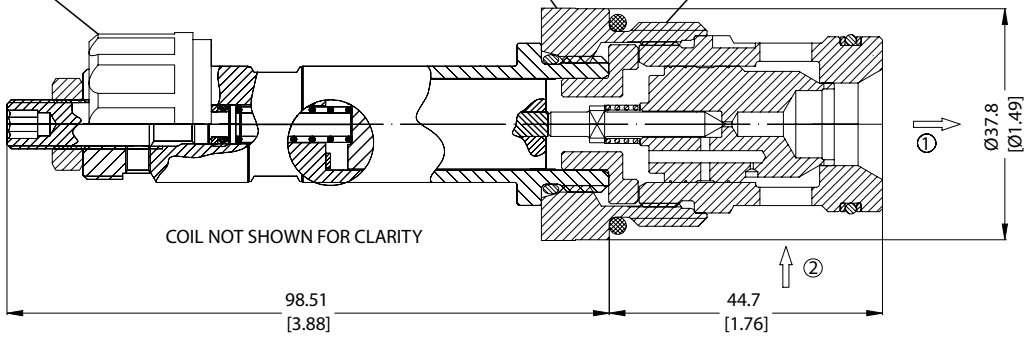

ORDERING INFORMATION

PSVP16 – NCR – 12D – DE – B – 00

Proportional Flow Control Valve, Non-Compensated, Poppet Type, Normally Closed, Free Reverse Flow, 16 Size Cavity

Code	Coil Voltage
00	No Coil
12D	12V DC
24D	24 V DC

Code	Coil Termination
00	No Coil
AJ	Amp Junior
DE	Deutsch
DN	DIN 43650

Code	Seal	Seal Kit
B	Buna-N	354008719
V	Viton	354008819

Body & Ports	Body Nomenclature
00 = No housing	No Body
DG6B = Al, 3/4 BSP	SDC16-2-DG-6B
DG8B = Al, 1 BSP	SDC16-2-DG-8B
12S = Al, #12 SAE	CP16-2-12S
16S = Al, #16 SAE	CP16-2-16S
Other housings available	

Comatrol
RESPONSIVENESS IN MOTION
Member of the Danfoss Group

Proportional Valves Catalog
Flow Control, Non-Compensated, Normally Open
CP518-PNO

OPERATION

This valve is a non-compensated, normally-open, proportional flow control.

SPECIFICATIONS

Rated pressure	210 bar [3000 psi]
Rated flow at 6 bar [80 psi]	12 l/min [3 US gal/min]
Weight	0.36 kg [0.80 lb]
Hysteresis	4% maximum
Threshold current	0.2 A (12 VDC coil) 0.1 A (24 VDC coil)
Maximum control current	1.2 A (12 VDC coil) 0.6 A (24 VDC coil)
Pressure differential	21 bar [300 psi] maximum
Cavity	SDC08-2
Standard Coil	M19P 22 Watt
Coil nut	173802114

Theoretical performance

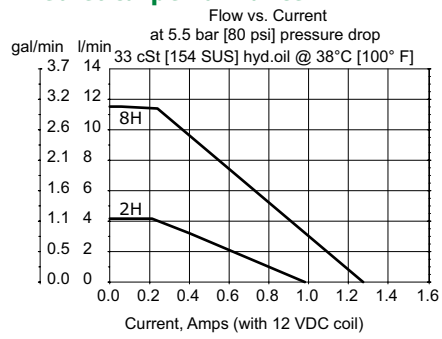

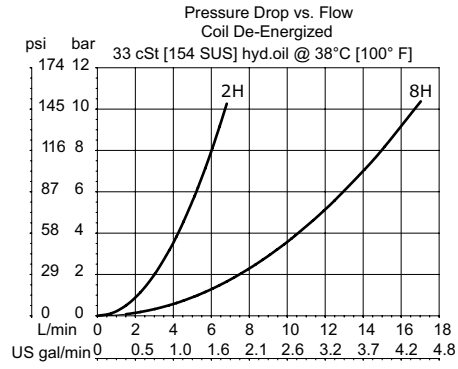

Schematic

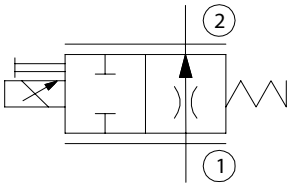

DIMENSIONS

mm [in]

Cross-sectional view

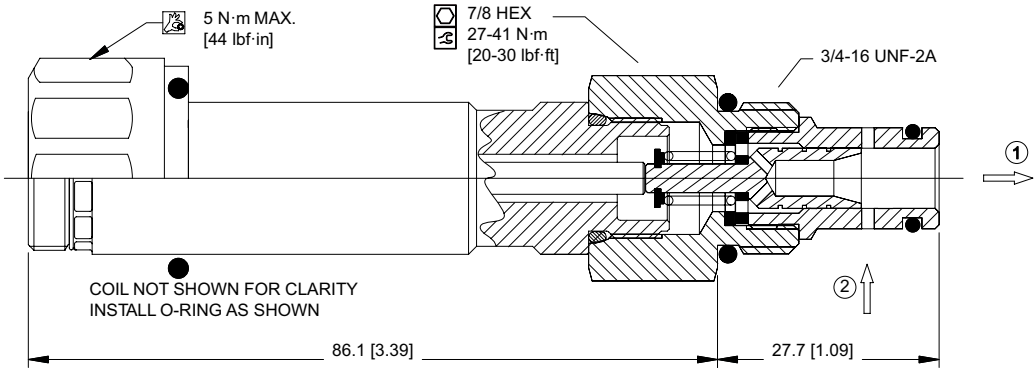

ORDERING INFORMATION

CP518-PNO-U-6S-2H-24-DE

Termination
00 = No connector
DE = Deutsch
DN = DIN 43650
FL = Lead wires
AJ = AMP Jr

Voltage
00 = No coil
12 = 12 VDC
24 = 24 VDC

Seals
U = Urethane
Seal kits
120591

Flow code
2H
8H

Housing P/N
No Housing
CP08-2-4S
CP08-2-6S
SDC08-2-DG-2B
SDC08-2-DG-3B

Housing and ports
0 = Cartridge only
4S = AL, #4 SAE
6S = AL, #6 SAE
2B = AL,1/4 BSP
3B = AL, 3/8 BSP

Comatrol
RESPONSIVENESS IN MOTION
Member of the Danfoss Group

Proportional Valves Catalog
Flow Control, Non-Compensated, Normally Open
PSV10-NO

OPERATION

This is a normally-open, direct-acting, spool-type, non-compensated, proportional flow-control. Controlled flow is from port 1 to 2.

SPECIFICATIONS

Rated pressure	260 bar [3770 psi]
Maximum flow at 10 bar [145 psi]	PSV10-NO-10: 10 l/min [2.64 US gal/min] PSV10-NO-25: 25 l/min [6.6 US gal/min] PSV10-NO-40: 40 l/min [10.6 US gal/min]
Leakage	420 cm^3/min [25.6 in^3/min] @ rated pressure
Weight	0.51 kg [1.12 lb]
Hysteresis	5% maximum
Threshold current	0.1 A (12 VDC coil) 0.05 A (24 VDC coil)
Maximum control current	1.8 A (12 VDC coil) 0.9 A (24 VDC coil)
Cavity	SDC10-2
Standard Coil	M19P 22 Watt

Theoretical performance

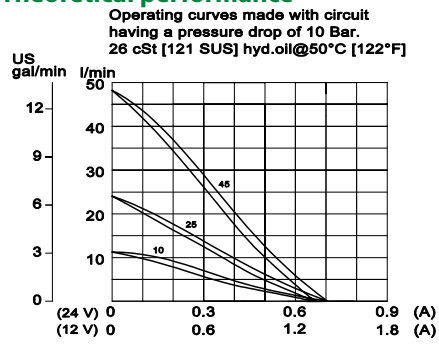

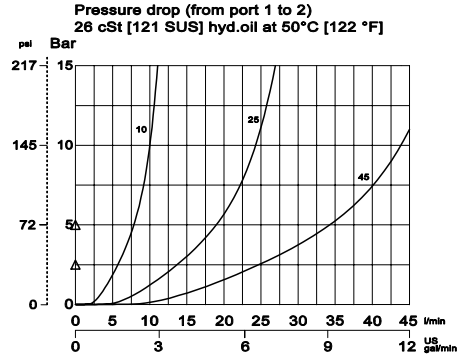

Schematic

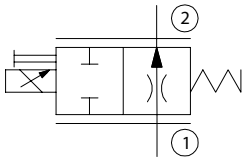

DIMENSIONS

mm [in]

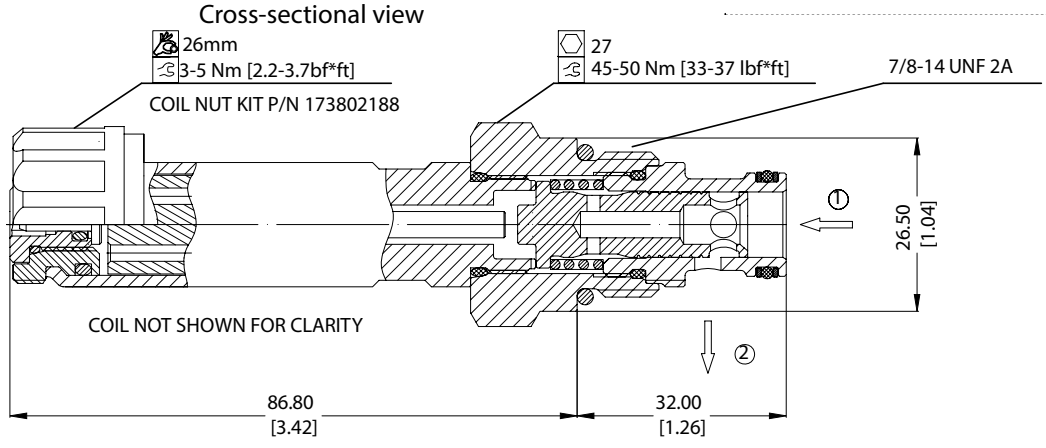

ORDERING INFORMATION

PSV10 – NO – 45 – 12D – DE – SPS – B - 00

Proportional Flow Control Valve, Non-Compensated, Normally Open, 10 Size Cavity

Code	Max regulated flow
10	10 l/m
25	25 l/m
45	45 l/m

Code	Coil Voltage
00	No Coil
12D	12V DC
24D	24 V DC

Code	Coil Termination
00	No Coil
AJ	Amp Junior
DE	Deutsch
DN	DIN 43650

Code*	Manual Override
Omit	Push Pin (Standard)
SPS	Screw Style (Push-Type Valve)

*PB (Push-Button) available upon request

Code	Seal	Seal Kit
B	Buna-N	35400401
V	Viton	35400341

Body & Ports	Body Nomenclature
0mit = Cartridge only	No Body
6S = Al, #6 SAE	CP10-2-6S
8S = Al, #8 SAE	CP10-2-8S
DG3B = Al, 3/8 BSP	SDC10-2-DG3B
DG4B = Al, 1/2 BSP	SDC10-2-DG4B
Other housings available	

Comatrol
RESPONSIVENESS IN MOTION
Member of the Danfoss Group

Proportional Valves Catalog
Flow Control, Non-Compensated, Normally Open
PSV12-NO

OPERATION

This is a normally-open, direct-acting, spool-type, non-compensated, proportional flow-control. Controlled flow is from port 1 to 2.

SPECIFICATIONS

Rated pressure	260 bar [3770 psi]
Maximum flow at 10 bar [145 psi]	PSV12-NO-60: 60 l/min [15.85 US gal/min] PSV12-NO-80: 80 l/min [31.13 US gal/min] PSV12-NO-100: 100 l/min [26.41 US gal/min]
Leakage	420 cm^3/min [25.6 in^3/min] @ rated pressure
Weight	0.76 kg [1.68 lb]
Hysteresis	5% maximum
Threshold current	0.3 A (12 VDC coil) 0.15 A (24 VDC coil)
Maximum control current	1.8 A (12 VDC coil) 0.9 A (24 VDC coil)
Cavity	SDC12-2
Standard Coil	D14E(35W) 35 Watt

Theoretical performance

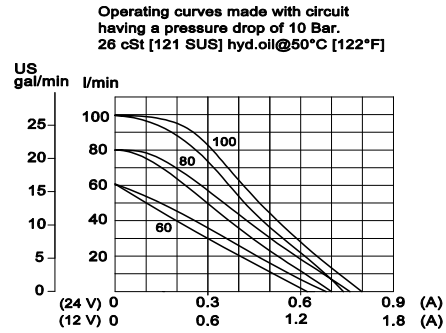

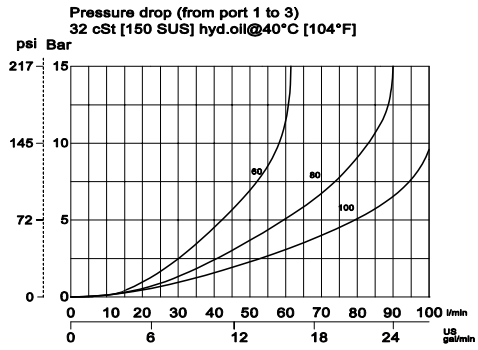

Schematic

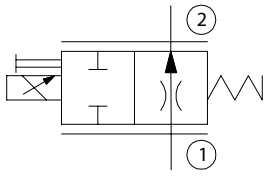

DIMENSIONS

mm [in]

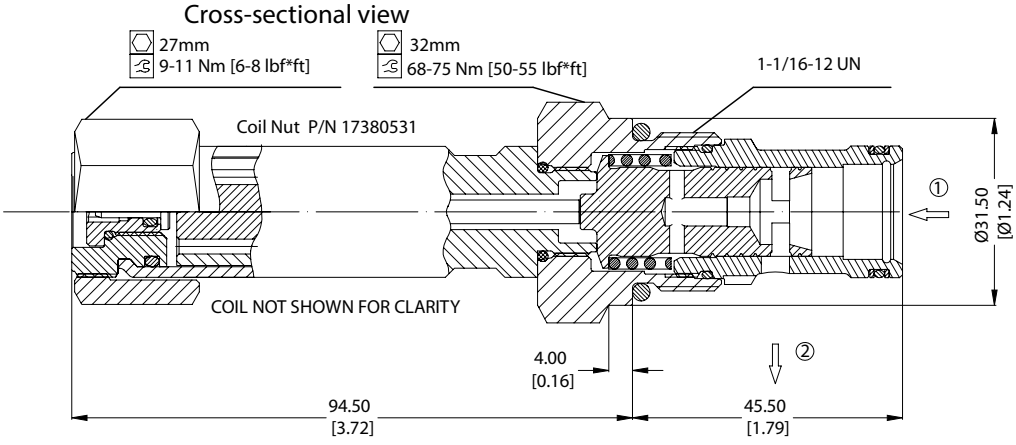

ORDERING INFORMATION

PSV12 – NO – 100 – 12D – DE – SPS – B – 00

Proportional Flow Control Valve, Non-Compensated, Normally Open, 12 Size Cavity

Code	Max regulated flow
60	60 l/m
80	80 l/m
100	100 l/m

Code	Coil Voltage
00	No Coil
12D	12V DC
24D	24 V DC

Code	Coil Termination
00	No Coil
AJ	Amp Junior
DE	Deutsch
DN	DIN 43650

Code*	Manual Override
Omit	Push Pin (Standard)
SPS	Screw Style (Push-Type Valve)

*PB (Push-Button) available upon request

Code	Seal	Seal Kit
B	Buna-N	354008319
V	Viton	354008419

Body & Ports	Body Nomenclature
00 = No housing	No Body
10S = Al, #10 SAE	CP12-2-10S
12S = Al, #12 SAE	CP12-2-12S
DG4B = Al, 1/2 BSP	SDC12-2-DG4B
DG6B = Al, 3/4 BSP	SDC12-2-DG6B
Other housings available	

Comatrol
RESPONSIVENESS IN MOTION
Member of the Danfoss Group

Proportional Valves Catalog
Flow Control, Non-Compensated, Normally Open
PSV16-NO

OPERATION

This is a normally-open, direct-acting, spool-type, non-compensated, proportional flow-control. Controlled flow is from port 1 to 2.

SPECIFICATIONS

Rated pressure	260 bar [3770 psi]
Rated flow at 10 bar [145 psi]	110 l/min [29 US gal/min]
Leakage	420 cm^3/min [25.6 in^3/min]] @ Rated pressure
Weight	0.87 kg [1.92 lb]
Hysteresis	5% maximum
Threshold current	0.3 A (12 VDC coil) 0.15 A (24 VDC coil)
Maximum control current	1.8 A (12 VDC coil) 0.9 A (24 VDC coil)
Cavity	SDC16-2
Standard Coil	D14E(35W) 35 Watt

Theoretical performance

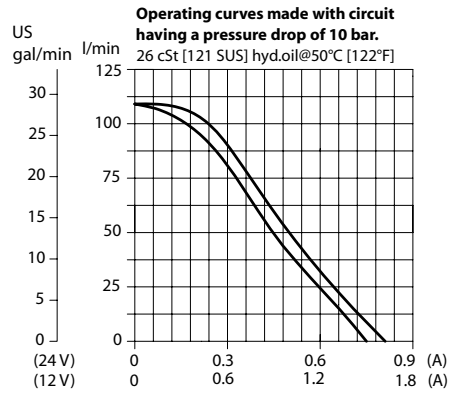

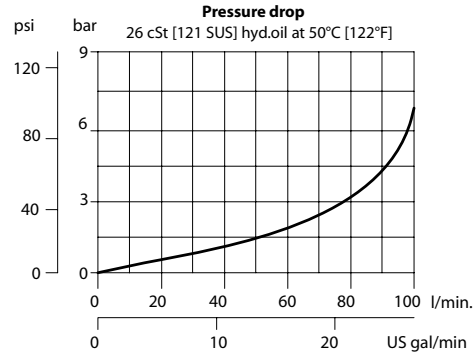

Schematic

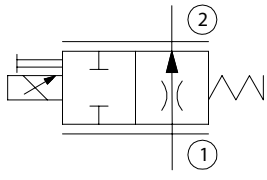

DIMENSIONS

mm [in]

Cross-sectional view

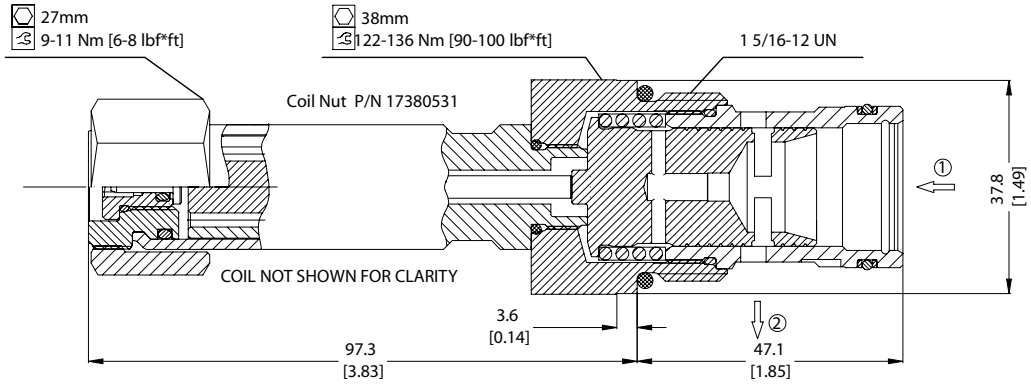

ORDERING INFORMATION

PSV16 – NO – 110 – 12D – DE – SPS – B – 00

Proportional Flow Control Valve, Non-Compensated, Normally Open, 16 Size Cavity

Code	Max regulated flow
110	110 l/m

Code	Coil Voltage
00	No Coil
12D	12V DC
24D	24 V DC

Code	Coil Termination
00	No Coil
AJ	Amp Junior
DE	Deutsch
DN	DIN 43650

Code*	Manual Override
Omit	Push Pin (Standard)
SPS	Screw Style (Push-Type Valve)

*PB (Push-Button) available upon request

Code	Seal	Seal Kit
B	Buna-N	354008719
V	Viton	354008819

Body & Ports	Body Nomenclature
00 = No housing	No Body
DG6B = Al, 3/4 BSP	SDC16-2-DG-6B
DG8B = Al, 1 BSP	SDC16-2-DG-8B
12S = Al, #12 SAE	CP16-2-12S
16S = Al, #16 SAE	CP16-2-16S
Other housings available	

Comatrol
RESPONSIVENESS IN MOTION
Member of the Danfoss Group

Proportional Valves Catalog

Flow Control, Non-Compensated, Normally Open, Poppet Type

PSVP10-NOR

OPERATION

This is a non-compensated, normally-open, pilot-operated, poppet-type, proportional flow-control. Controlled flow is from port 2 to 1.

SPECIFICATIONS

Rated pressure	260 bar [3770 psi]
Rated flow at 10 bar [145 psi]	45 l/min [12 US gal/min]
Leakage	6 drops/min @ Rated pressure
Weight	0.54 kg [1.19 lb]
Hysteresis	8% maximum
Cavity	SDC10-2
Standard Coil	M19P 22 Watt

Theoretical performance

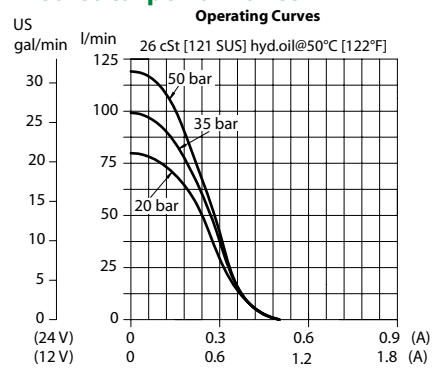

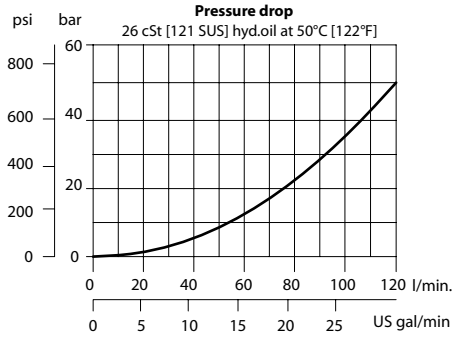

Schematic

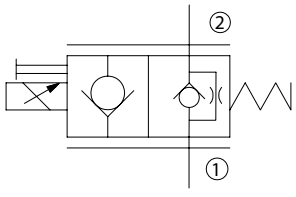

DIMENSIONS

mm [in]

Cross-sectional view

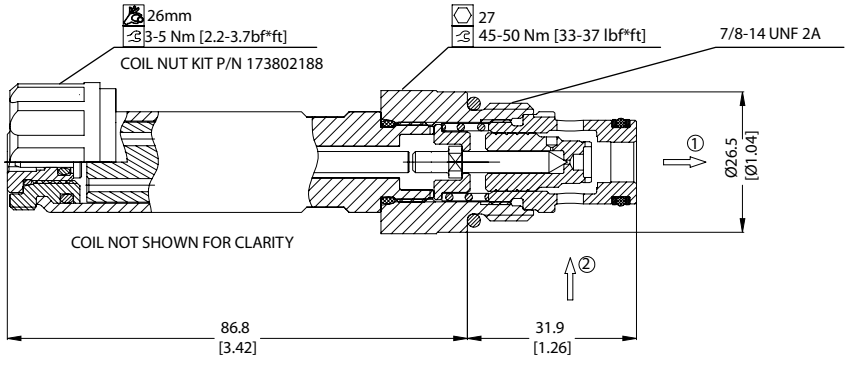

ORDERING INFORMATION

PSVP10 – NOR – 12D – DE – SPS – B – 00

Proportional Flow Control Valve, Non-Compensated, Poppet Type, Normally Open, Free Reverse Flow, 10 Size Cavity

Code	Coil Voltage
00	No Coil
12D	12V DC
24D	24 V DC

Code	Coil Termination
00	No Coil
AJ	Amp Junior
DE	Deutsch
DN	DIN 43650

Code*	Manual Override
Omit	Push Pin (Standard)
SPS	Screw Style (Push-Type Valve)

*PB (Push-Button) available upon request

Code	Seal	Seal Kit
B	Buna-N	354004019
V	Viton	354003419

Body & Ports	Body Nomenclature
00 = No housing	No Body
6S = Al, #6 SAE	CP10-2-6S
8S = Al, #8 SAE	CP10-2-8S
DG3B = Al, 3/8 BSP	SDC10-2-DG3B
DG4B = Al, 1/2 BSP	SDC10-2-DG4B
Other housings available	

Comatrol
RESPONSIVENESS IN MOTION
Member of the Danfoss Group

Proportional Valves Catalog

Flow Control, Non-Compensated, Normally Open, Poppet Type

PSVP12-NOR

OPERATION

This is a non-compensated, normally-open, pilot-operated, poppet-type, proportional flow-control. Controlled flow is from port 2 to 1.

SPECIFICATIONS

Rated pressure	260 bar [3770 psi]
Rated flow at 10 bar [150 psi]	70 l/min [18 US gal/min]
Leakage	6 drops/min @ Rated pressure
Weight	0.60 kg [1.32 lb]
Hysteresis	8% maximum
Cavity	SDC12-2
Standard Coil	M19P 22 Watt

Theoretical performance

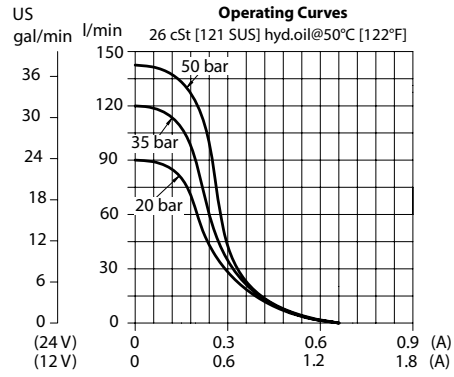

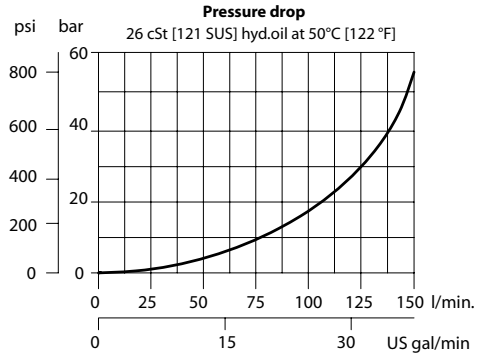

Schematic

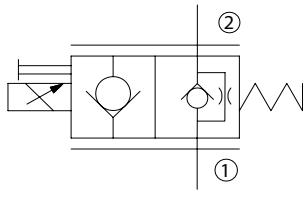

DIMENSIONS

mm [in]

Cross-sectional view

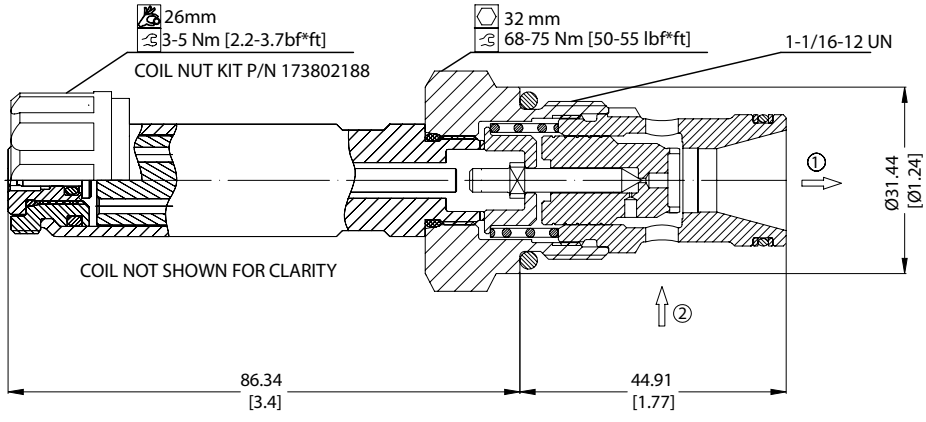

ORDERING INFORMATION

PSVP12 – NOR – 12D – DE – SPS – B – 00

Proportional Flow Control Valve, Non-Compensated, Poppet Type, Normally Open, Free Reverse Flow, 12 Size Cavity

Code	Coil Voltage
00	No Coil
12D	12V DC
24D	24 V DC

Code	Coil Termination
00	No Coil
AJ	Amp Junior
DE	Deutsch
DN	DIN 43650

Code*	Manual Override
Omit	Push Pin (Standard)
SPS	Screw Style (Push-Type Valve)

*PB (Push-Button) available upon request

Code	Seal	Seal Kit
B	Buna-N	354008319
V	Viton	354008419

Body & Ports	Body Nomenclature
00 = No housing	No Body
10S = Al, #10 SAE	CP12-2-10S
12S = Al, #12 SAE	CP12-2-12S
DG4B = Al, 1/2 BSP	SDC12-2-DG4B
DG6B = Al, 3/4 BSP	SDC12-2-DG6B
Other housings available	

Comatrol
RESPONSIVENESS IN MOTION
Member of the Danfoss Group

Proportional Valves Catalog

Flow Control, Non-Compensated, Normally Open, Poppet Type

PSVP16-NOR

OPERATION

This is a non-compensated, normally-open, pilot-operated, poppet-type, proportional flow-control. Controlled flow is from port 2 to 1.

SPECIFICATIONS

Rated pressure	260 bar [3770 psi]
Rated flow at 10 bar [150 psi]	80 l/min [21 US gal/min]
Leakage	6 drops/min @ Rated pressure
Weight	0.85 kg [1.87 lb]
Hysteresis	8% maximum
Cavity	SDC16-2
Standard Coil	M19P 22 Watt

Theoretical performance

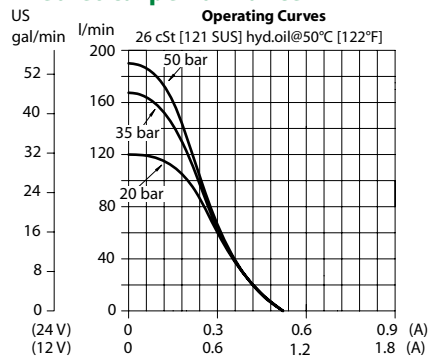

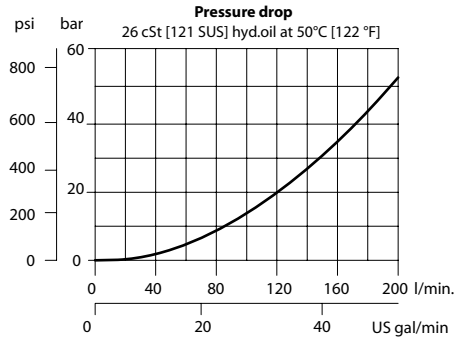

Schematic

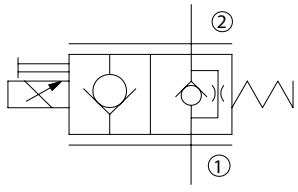

DIMENSIONS

mm [in]

Cross-sectional view

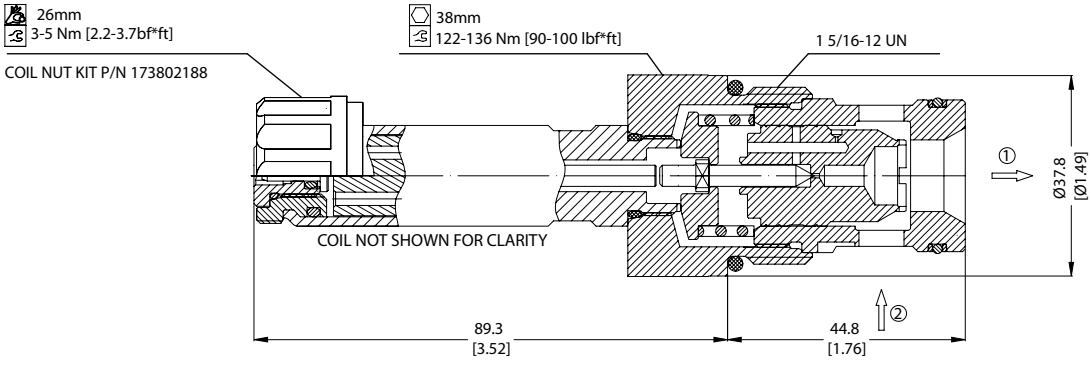

ORDERING INFORMATION

PSVP16 – NOR – 12D – DE – SPS – B – 00

Proportional Flow Control Valve, Non-Compensated, Poppet Type, Normally Open, Free Reverse Flow, 16 Size Cavity

Code	Coil Voltage
00	No Coil
12D	12V DC
24D	24 V DC

Code	Coil Termination
00	No Coil
AJ	Amp Junior
DE	Deutsch
DN	DIN 43650

Code*	Manual Override
Omit	Push Pin (Standard)
SPS	Screw Style (Push-Type Valve)

*PB (Push-Button) available upon request

Code	Seal	Seal Kit
B	Buna-N	354008719
V	Viton	354008819

Body & Ports	Body Nomenclature
00 = No housing	No Body
DG6B = Al, 3/4 BSP	SDC16-2-DG-6B
DG8B = Al, 1 BSP	SDC16-2-DG-8B
12S = Al, #12 SAE	CP16-2-12S
16S = Al, #16 SAE	CP16-2-16S
Other housings available	

Comatrol
RESPONSIVENESS IN MOTION
Member of the Danfoss Group

Proportional Valves Catalog

Flow Control, Pressure Compensated, Restrictive Type, Normally Closed

PFC10-RC

OPERATION

This is a pressure-compensated, restrictive-type, normally-closed, spool-type, proportional flow-control. Controlled flow is from port 1 to 2.

SPECIFICATIONS

Rated pressure	260 bar [3770 psi]
Maximum Flow at rated pressure	PFC10-RC-10: 10 l/min [2.64 US gal/min] PFC10-RC-30: 30 l/min [7.9 US gal/min]
Leakage	420 cm^3/min [25.6 in^3/min] @ rated pressure
Weight	0.65 kg [1.43 lb]
Hysteresis	8% maximum
Threshold current	0.5 A (12 VDC coil) 0.25 A (24 VDC coil)
Maximum control current	1.8 A (12 VDC coil) 0.9 A (24 VDC coil)
Cavity	SDC10-2
Standard Coil	M19P 22 Watt

Theoretical performance

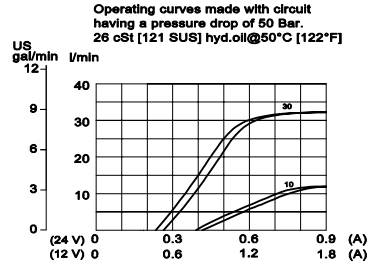

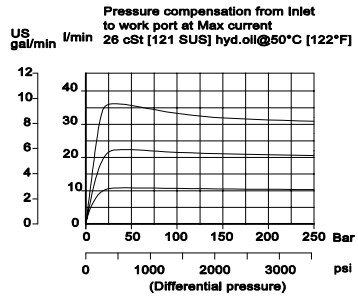

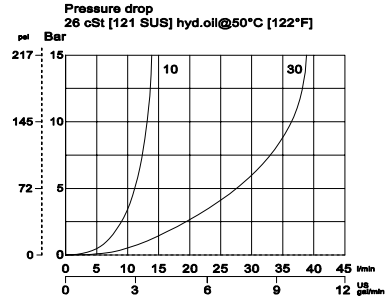

Schematic

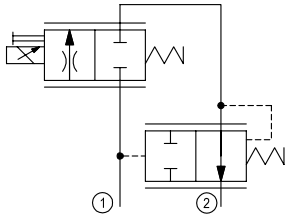

DIMENSIONS

mm [in]

Cross-sectional view

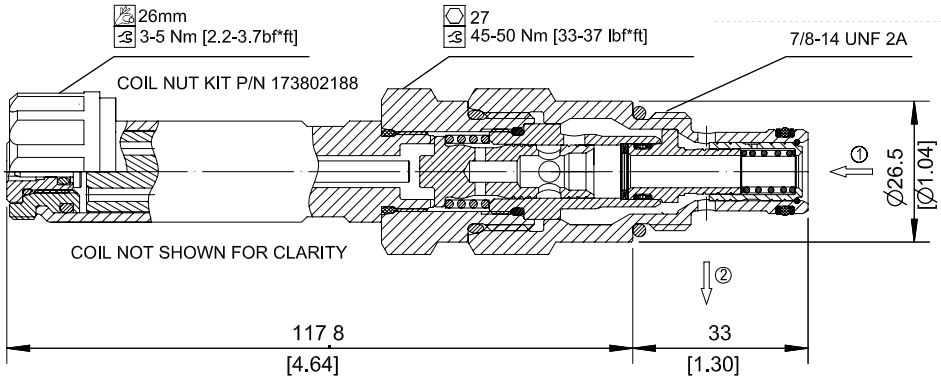

ORDERING INFORMATION

PFC10 – RC – 30 – 12D – DE – SPS – B - 00

Proportional Flow Control Valve, Pressure Compensated, Restrictive Type, Normally Closed, 10 Size Cavity

Code	Max regulated flow
10	10 l/m
30	30l/m

Code	Coil Voltage
00	No Coil
12D	12V DC
24D	24 V DC

Code	Coil Termination
00	No Coil
AJ	Amp Junior
DE	Deutsch
DN	DIN 43650

Code*	Manual Override
Omit	Push Pin (Standard)
SPS	Screw Style (Push-Type Valve)

*PB (Push-Button) available upon request

Code	Seal	Seal Kit
B	Buna-N	35400401
V	Viton	35400341

Body & Ports	Body Nomenclature
00 = No housing	No Body
6S = Al, #6 SAE	CP10-2-6S
8S = Al, #8 SAE	CP10-2-8S
DG3B = Al, 3/8 BSP	SDC10-2-DG3B
DG4B = Al, 1/2 BSP	SDC10-2-DG4B
Other housings available	

Comatrol
RESPONSIVENESS IN MOTION
Member of the Danfoss Group

Proportional Valves Catalog

Flow Control, Pressure Compensated, Restricted Type, Normally Closed

PFC12-RC

OPERATION

This is a pressure-compensated, restrictive-type, normally-closed, spool-type, proportional flow-control. Controlled flow is from port 1 to 2.

SPECIFICATIONS

Rated pressure	260 bar [3770 psi]
Maximum Flow at rated pressure	PFC12-RC-45: 45 l/min [11.9 US gal/min] PFC12-RC-65: 65 l/min [17.17 US gal/min]
Leakage	420 cm^3/min [25.6 in^3/min] @ rated pressure
Weight	0.77 kg [1.70 lb]
Hysteresis	8% maximum
Threshold current	0.3 A (12 VDC coil) 0.15 A (14 VDC coil)
Maximum control current	1.8 A (12 VDC coil) 0.9 A (14 VDC coil)
Cavity	SDC12-2
Standard Coil	D14E(35W) 35 Watt

Theoretical performance

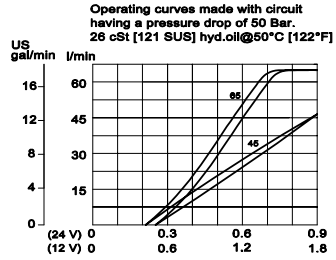

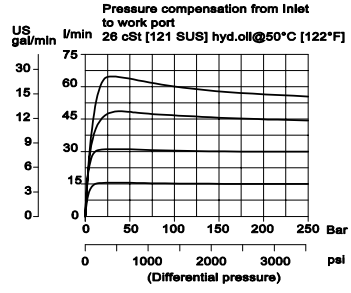

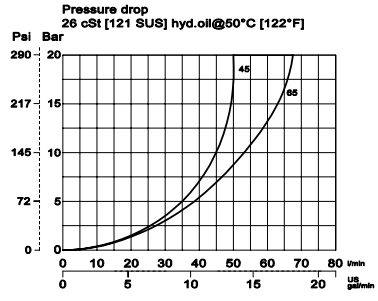

Schematic

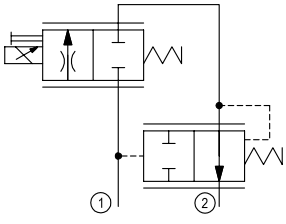

DIMENSIONS

mm [in]

Cross-sectional view

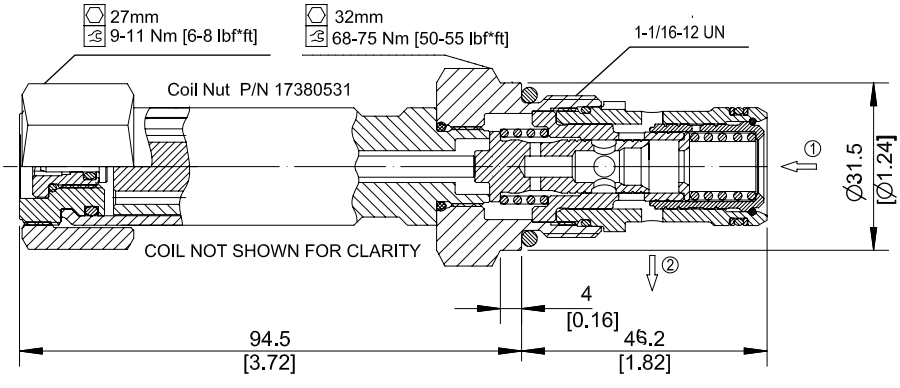

ORDERING INFORMATION

PFC12 – RC – 65 – 12D – DE – SPS – B – 00

Proportional Flow Control Valve, Pressure Compensated, Restrictive Type, Normally Closed, 12 Size Cavity

Code	Max regulated flow
45	45 l/m
65	65 l/m

Code	Coil Voltage
00	No Coil
12D	12V DC
24D	24 V DC

Code	Coil Termination
00	No Coil
AJ	Amp Junior
DE	Deutsch
DN	DIN 43650

Code*	Manual Override
Omit	Push Pin (Standard)
SPS	Screw Style (Push-Type Valve)

*PB (Push-Button) available upon request

Code	Seal	Seal Kit
B	Buna-N	354008319
V	Viton	354008419

Body & Ports	Body Nomenclature
00 = No housing	No Body
10S = Al, #10 SAE	CP12-2-10S
12S = Al, #12 SAE	CP12-2-12S
DG4B = Al, 1/2 BSP	SDC12-2-DG4B
DG6B = Al, 3/4 BSP	SDC12-2-DG6B
Other housings available	

Comatrol
RESPONSIVENESS IN MOTION
Member of the Danfoss Group

Proportional Valves Catalog

Flow Control, Pressure Compensated, Restrictive Type, Normally Closed

PFC16-RC

OPERATION

This is a pressure-compensated, restrictive-type, normally-closed, spool-type, proportional Flow control. Controlled flow is from port 1 to 2.

SPECIFICATIONS

Rated pressure	260 bar [3770 psi]
Rated Flow at 260 bar [3771 psi]	90 l/min [24 US gal/min]
Leakage	420 cm^3/min [25.6 in^3/min] @ rated pressure
Weight	0.91 kg [2.01 lb]
Hysteresis	8% maximum
Threshold current	0.4 A (12 VDC coil) 0.2 A (24 VDC coil)
Maximum control current	1.8 A (12 VDC coil) 0.9 A (24 VDC coil)
Cavity	SDC16-2
Standard Coil	D14E(35W) 35 Watt

Theoretical performance

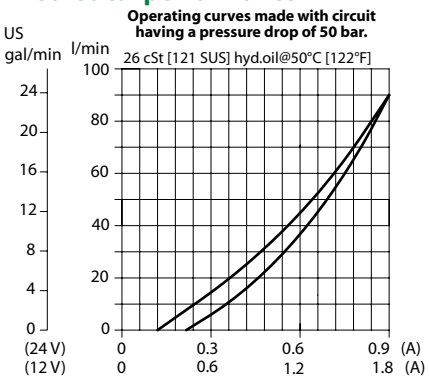

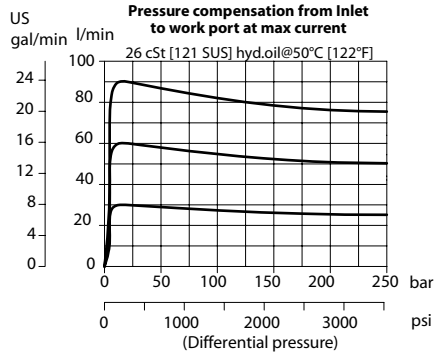

Schematic

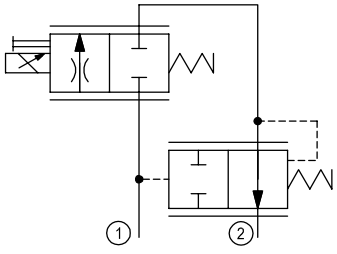

DIMENSIONS

mm [in]

Cross-sectional view

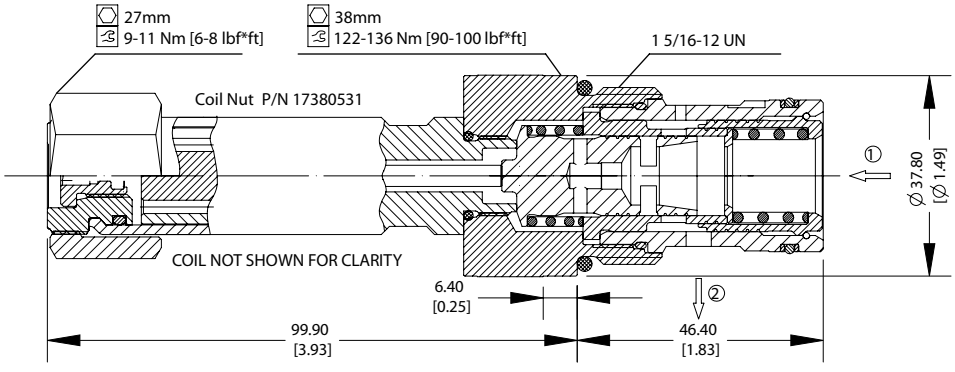

ORDERING INFORMATION

PFC16 – RC – 90 – 12D – DE – SPS – B – 00

Proportional Flow Control Valve, Pressure Compensated, Restrictive Type, Normally Closed, 16 Size Cavity

Code	Max regulated flow
90	90 l/m

Code	Coil Voltage
00	No Coil
12D	12V DC
24D	24 V DC

Code	Coil Termination
00	No Coil
AJ	Amp Junior
DE	Deutsch
DN	DIN 43650

Code*	Manual Override
Omit	Push Pin (Standard)
SPS	Screw Style (Push-Type Valve)

*PB (Push-Button) available upon request

Code	Seal	Seal Kit
B	Buna-N	354008719
V	Viton	354008819

Body & Ports	Body Nomenclature
00 = No housing	No Body
DG6B = AI, 3/4 BSP	SDC16-2-DG-6B
DG8B = AI, 1 BSP	SDC16-2-DG-8B
12S = AI, #12 SAE	CP16-2-12S
16S = AI, #16 SAE	CP16-2-16S
Other housings available	

Comatrol
RESPONSIVENESS IN MOTION
Member of the Danfoss Group

Proportional Valves Catalog

Flow Control, Pressure Compensated, Restrictive Type, Normally Open

PFC10-RO

OPERATION

This is a pressure-compensated, restrictive-type, normally-open, spool-type, proportional flow-control. Controlled flow is from port 1 to 2.

SPECIFICATIONS

Rated pressure	260 bar [3770 psi]
maximum Flow at rated pressure	PFC10-RO-10: 10 l/min [2.64 US gal/min] PFC10-RO-30: 30 l/min [7.9 US gal/min]
Leakage	420 cm^3/min [25.6 in^3/min] @ rated pressure
Weight	0.65 kg [1.43 lb]
Hysteresis	8% maximum
Threshold current	0.2 A (12 VDC coil) 0.1 A (24 VDC coil)
Maximum control current	1.8 A (12 VDC coil) 0.9 A (24 VDC coil)
Cavity	SDC10-2
Standard Coil	M19P 22 Watt

Theoretical performance

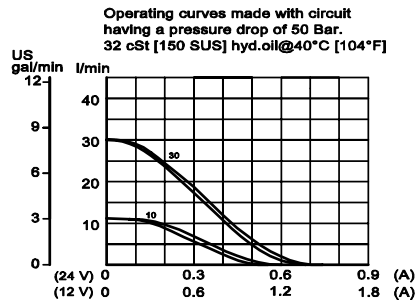

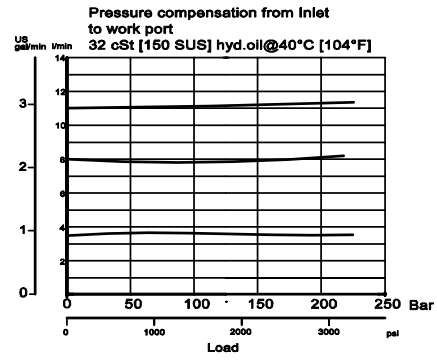

Schematic

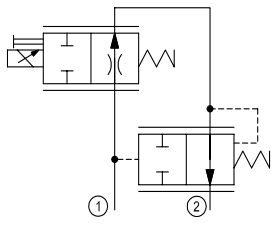

DIMENSIONS

mm [in]

Cross-sectional view

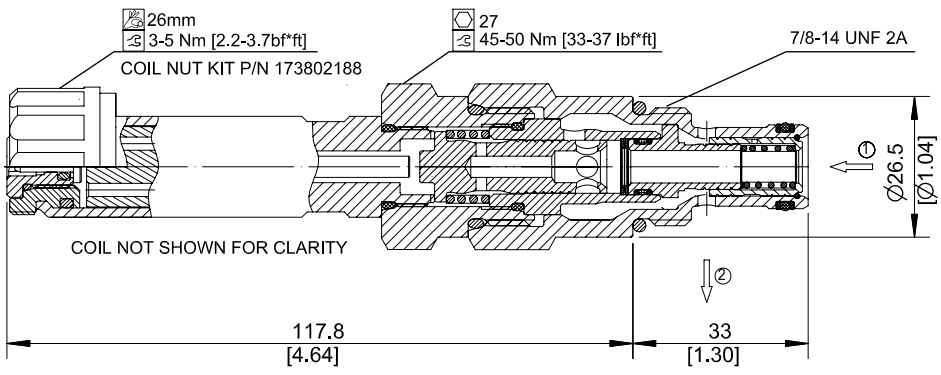

ORDERING INFORMATION

PFC10 – RO – 30 – 12D – DE- SPS – B - 00

Proportional Flow Control Valve, Pressure Compensated, Restrictive Type, Normally Open, 10 Size Cavity

Code	Max regulated flow
10	10 l/m
30	30 l/m

Code	Coil Voltage
00	No Coil
12D	12V DC
24D	24 V DC

Code	Coil Termination
00	No Coil
AJ	Amp Junior
DE	Deutsch
DN	DIN 43650

Code*	Manual Override
Omit	Push Pin (Standard)
SPS	Screw Style (Push-Type Valve)

*PB (Push-Button) available upon request

Code	Seal	Seal Kit
B	Buna-N	354004019
V	Viton	354003419

Body & Ports	Body Nomenclature
00 = No housing	No Body
6S = Al, #6 SAE	CP10-2-6S
8S = Al, #8 SAE	CP10-2-8S
DG3B = Al, 3/8" BSP	SDC10-2-DG3B
DG4B = Al, 1/2" BSP	SDC10-2-DG4B
Other housings available	

Comatrol
RESPONSIVENESS IN MOTION
Member of the Danfoss Group

Proportional Valves Catalog

Flow Control, Pressure Compensated, Restrictive Type, Normally Open

PFC12-RO

OPERATION

This is a pressure-compensated, restrictive-type, normally-open, spool-type, proportional flow-control. Controlled flow is from port 1 to 2.

SPECIFICATIONS

Rated pressure	260 bar [3770 psi]
Maximum Flow at rated pressure	PFC12-RO-45: 45 l/min [11.9 US gal/min] PFC12-RO-60: 60 l/min [15.9 US gal/min]
Leakage	420 cm^3/min [25.6 in^3/min] @ Rated pressure
Weight	0.77 kg [1.70 lb]
Hysteresis	8% maximum
Threshold current	0.42 A (12 VDC coil) 0.21 A (24 VDC coil)
Maximum control current	1.8 A (12 VDC coil) 0.9 A (24 VDC coil)
Cavity	SDC12-2
Standard Coil	D14E(35W) 35 Watt

Theoretical performance

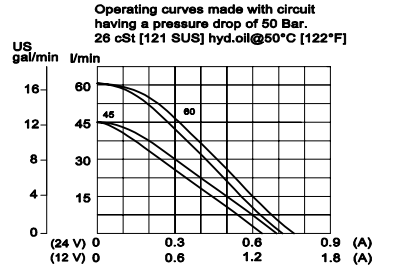

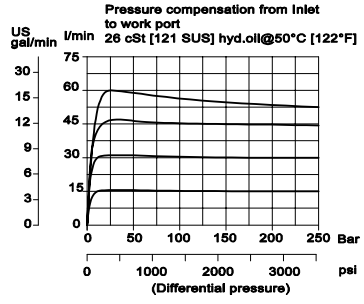

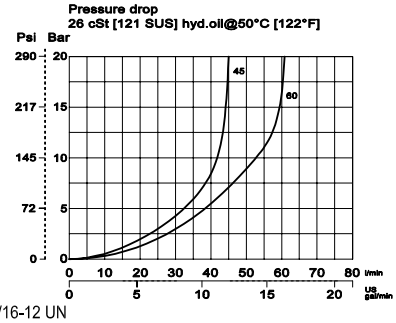

Schematic

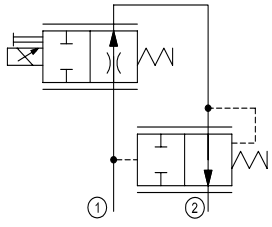

DIMENSIONS

mm [in]

Cross-sectional view

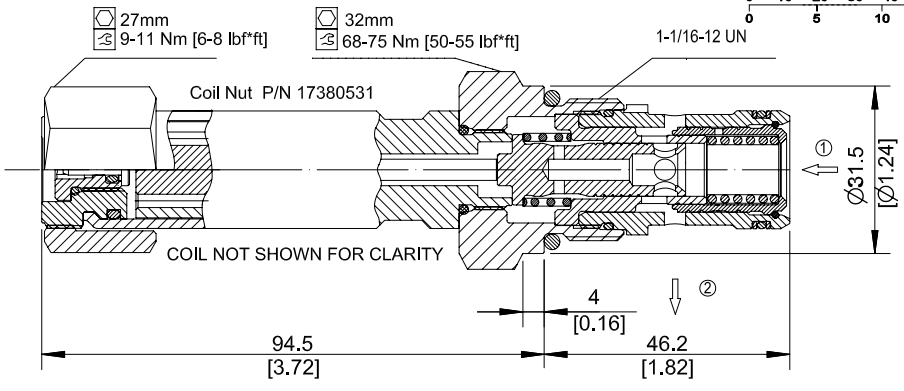

ORDERING INFORMATION

PFC12 – RO – 60 – 12D – DE – SPS – B – 00

Proportional Flow Control Valve, Pressure Compensated, Restrictive Type, Normally Open, 12 Size Cavity

Code	Max regulated flow
45	45 l/m
60	60 l/m

Code	Coil Voltage
00	No Coil
12D	12V DC
24D	24 V DC

Code	Coil Termination
00	No Coil
AJ	Amp Junior
DE	Deutsch
DN	DIN 43650

Code*	Manual Override
Omit	Push Pin (Standard)
SPS	Screw Style (Push-Type Valve)

*PB (Push-Button) available upon request

Code	Seal	Seal Kit
B	Buna-N	354008319
V	Viton	354008419

Body & Ports	Body Nomenclature
00 = No housing	No Body
10S = Al, #10 SAE	CP12-2-10S
12S =Al, #12 SAE	CP12-2-12S
DG4B = Al, 1/2 BSP	SDC12-2-DG4B
DG6B = Al, 3/4 BSP	SDC12-2-DG6B
Other housings available	

Comatrol
RESPONSIVENESS IN MOTION
Member of the Danfoss Group

Proportional Valves Catalog

Flow Control, Pressure Compensated, Restrictive Type, Normally Open

PFC16-RO

OPERATION

This is a pressure-compensated, restrictive-type, normally-open, spool-type, proportional flow-control. Controlled flow is from port 1 to 2.

SPECIFICATIONS

Rated pressure	260 bar [3770 psi]
Rated Flow at 260 bar [3771 psi]	85 l/min [22 US gal/min]
Leakage	420 cm^3/min [25.6 in^3/min] @ Rated pressure
Weight	0.91 kg [2.01 lb]
Hysteresis	8% maximum
Threshold current	0.2 A (12 VDC coil) 0.1 A (24 VDC coil)
Maximum control current	1.8 A (12 VDC coil) 0.9 A (24 VDC coil)
Cavity	SDC16-2
Standard Coil	D14E(35W) 35 Watt

Theoretical performance

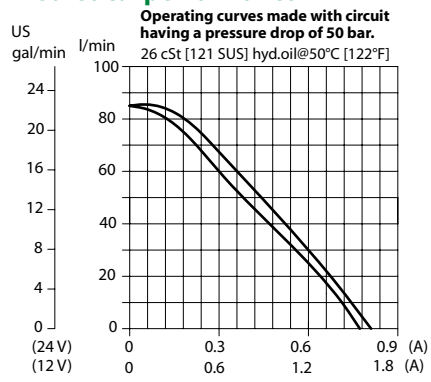

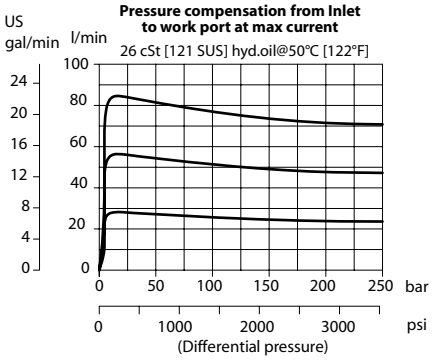

Schematic

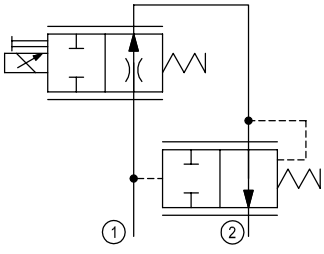

DIMENSIONS

mm [in]

Cross-sectional view

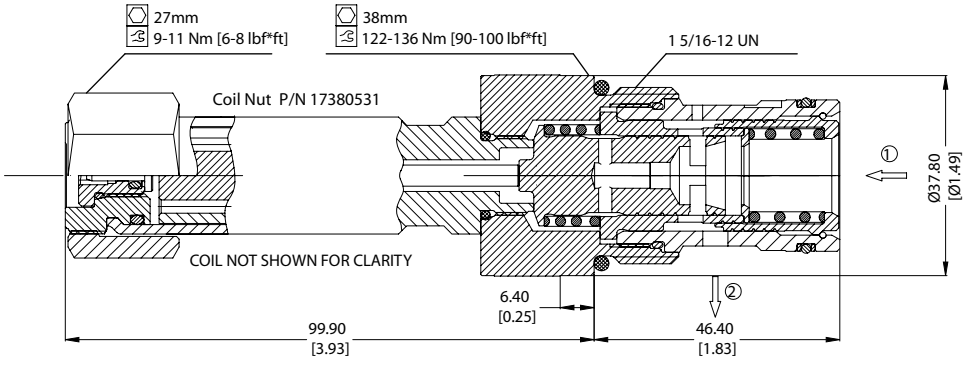

ORDERING INFORMATION

PFC16 – RO – 85 – 12D – DE – SPS – B – 00

Proportional Flow Control Valve, Pressure Compensated, Restrictive Type, Normally Open, 16 Size Cavity

Code	Max regulated flow
85	85 l/m

Code	Coil Voltage
00	No Coil
12D	12V DC
24D	24 V DC

Code	Coil Termination
00	No Coil
AJ	Amp Junior
DE	Deutsch
DN	DIN 43650

Code*	Manual Override
Omit	Push Pin (Standard)
SPS	Screw Style (Push-Type Valve)

*PB (Push-Button) available upon request

Code	Seal	Seal Kit
B	Buna-N	354008719
V	Viton	354008819

Body & Ports	Body Nomenclature
00 = No housing	No Body
DG6B = Al, 3/4 BSP	SDC16-2-DG-6B
DG8B = Al, 1 BSP	SDC16-2-DG-8B
12S = Al, #12 SAE	CP16-2-12S
16S = Al, #16 SAE	CP16-2-16S
Other housings available	

Comatrol
RESPONSIVENESS IN MOTION
Member of the Danfoss Group

Proportional Valves Catalog

Flow Control, Pressure Compensated, Priority Type, Normally Closed

PFC10-PC

OPERATION

This is a pressure-compensated, priority-type, normally-closed, spool-type, proportional flow-control. Controlled flow is from port 1 to 3, port 2 is bypass.

SPECIFICATIONS

Rated pressure	260 bar [3770 psi]
Maximum flow at rated pressure	PFC10-PC-10: 10 l/min [2.64 US gal/min] PFC10-PC-25: 25 l/min [6.6 US gal/min] PFC10-PC-40: 40 l/min [10.6 US gal/min]
Leakage	420 cm^3/min [25.6 in^3/min] @ rated pressure
Weight including coil	0.62 kg [1.37 lb]
Hysteresis	8% maximum
Threshold current	0.36 A (12 VDC coil) 0.18 A (24 VDC coil)
Maximum control current	1.8 A (12 VDC coil) 0.9 A (24 VDC coil)
Cavity	SDC10-3
Standard Coil	M19P 22 Watt

Theoretical performance

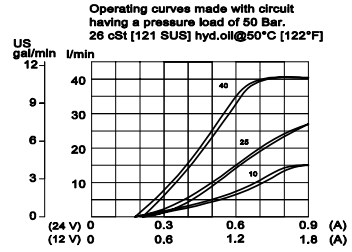

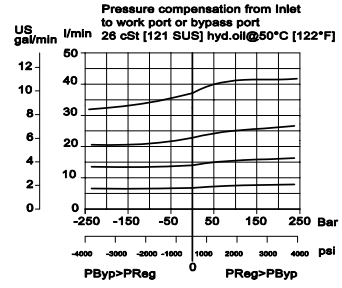

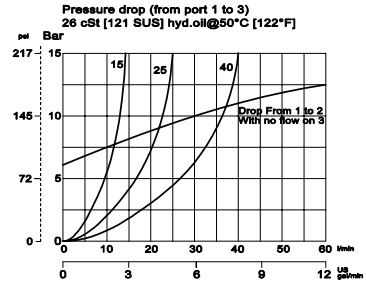

Schematic

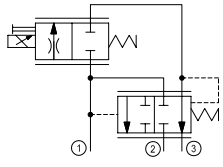

DIMENSIONS

mm [in]

Cross-sectional view

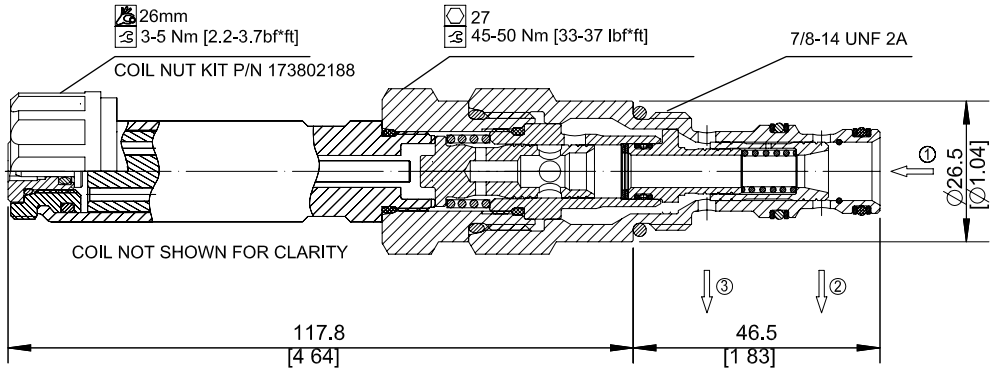

ORDERING INFORMATION

PFC10 – PC – 40 – 12D – DE – SPS – B - 00

Proportional Flow Control Valve, Pressure Compensated, Priority Type, Normally Closed, 10 Size Cavity

Code	Max regulated flow
10	10 = 10 l/m
25	25 = 10 l/m
40	40 = 10 l/m

Code	Coil Voltage
00	No Coil
12D	12V DC
24D	24 V DC

Code	Coil Termination
00	No Coil
AJ	Amp Junior
DE	Deutsch
DN	DIN 43650

Code*	Manual Override
Omit	Push Pin (Standard)
SPS	Screw Style (Push-Type Valve)

*PB (Push-Button) available upon request

Code	Seal	Seal Kit
B	Buna-N	35400421
V	Viton	35400371

Body & Ports	Body Nomenclature
00 = No housing	No Body
6S = Al, #6 SAE	CP10-3-6S
8S = Al, #8 SAE	CP10-3-8S
SES3B = Al, 3/8" BSP	SDC10-3-SE3B
SE4B = Al, 1/2" BSP	SDC10-3-SE4B
Other housings available	

Comatrol
RESPONSIVENESS IN MOTION
Member of the Danfoss Group

Proportional Valves Catalog

Flow Control, Pressure Compensated, Priority Type, Normally Closed

PFC12-PC

OPERATION

This is a pressure-compensated, priority-type, normally-closed, spool-type, proportional flow-control. Controlled flow is from port 1 to 3, port 2 is bypass.

SPECIFICATIONS

Rated pressure	260 bar [3770 psi]
Maximum flow at rated pressure	PFC12-PC-50: 50 l/min [13.21 US gal/min] PFC12-PC-65: 65 l/min [17.17 US gal/min]
Leakage	420 cm^3/min [25.6 in^3/min] @ rated pressure
Weight	0.81 kg [1.79 lb]
Hysteresis	8% maximum
Threshold current	0.5 A (12 VDC coil) 0.25 A (24 VDC coil)
Maximum control current	1.8 A (12 VDC coil) 0.9 A (24 VDC coil)
Cavity	SDC12-3
Standard Coil	D14E(35W) 35 Watt

Theoretical performance

REFERENCE

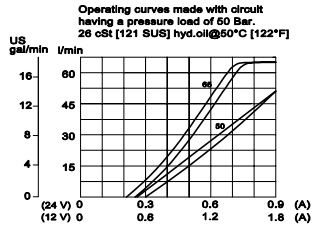

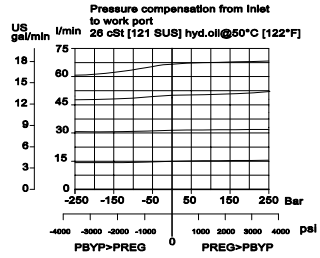

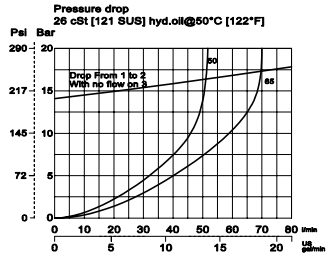

Schematic

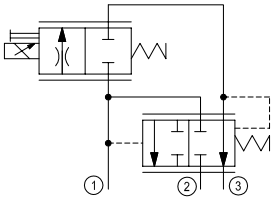

DIMENSIONS

mm [in]

Cross-sectional view

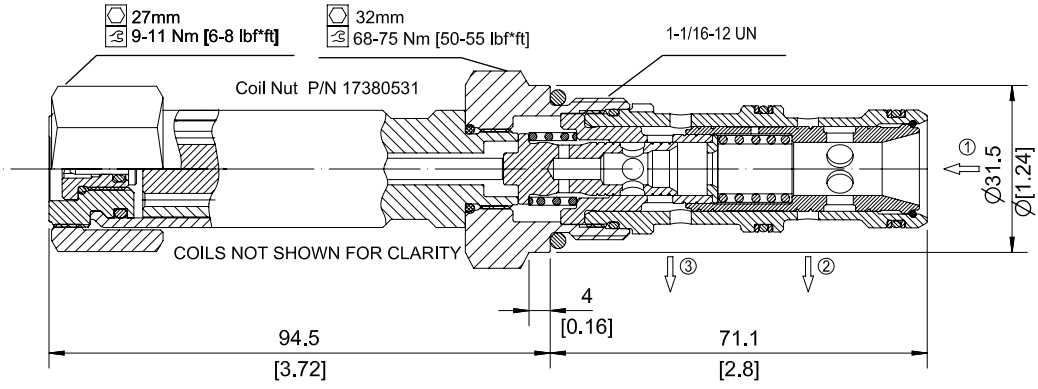

ORDERING INFORMATION

PFC12 – PC – 65 – 12D – DE – SPS – B – 00

Proportional Flow Control Valve, Pressure Compensated, Priority Type, Normally Closed, 12 Size Cavity

Code	Max regulated flow
50	50 l/m
65	65 l/m

Code	Coil Voltage
00	No Coil
12D	12V DC
24D	24 V DC

Code	Coil Termination
00	No Coil
AJ	Amp Junior
DE	Deutsch
DN	DIN 43650

Code*	Manual Override
Omit	Push Pin (Standard)
SPS	Screw Style (Push-Type Valve)

*PB (Push-Button) available upon request

Code	Seal	Seal Kit
B	Buna-N	354008319
V	Viton	354008419

Body & Ports	Body Nomenclature
00 = No housing	No Body
10S = Al, #10 SAE	CP12-3-10S
12S = Al, #12 SAE	CP12-3-12S
4B = Al, 1/2 BSP	SDC12-3-HE4B
6B = Al, 3/4 BSP	SDC12-3-HE6B
Other housings available	

Comatrol
RESPONSIVENESS IN MOTION
Member of the Danfoss Group

Proportional Valves Catalog

Flow Control, Pressure Compensated, Priority Type, Normally Closed

PFC16-PC

OPERATION

This is a pressure-compensated, priority-type, normally-closed, spool-type, proportional flow-control. Controlled flow is from port 1 to 3, port 2 is bypass.

SPECIFICATIONS

Rated pressure	260 bar [3770 psi]
Rated flow at 260 bar [3771 psi]	85 l/min [22 US gal/min]
Leakage	420 cm^3/min [25.6 in^3/min] @ rated pressure
Weight	0.97 kg [2.14 lb]
Hysteresis	8% maximum
Threshold current	0.4 A (12 VDC coil) 0.2 A (24 VDC coil)
Maximum control current	1.8 A (12 VDC coil) 0.9 A (24 VDC coil)
Cavity	SDC16-3
Standard Coil	D14E(35W) 35 Watt

Theoretical performance

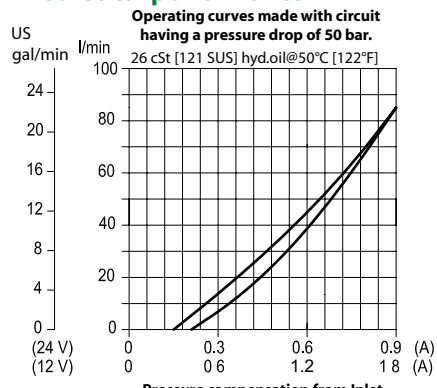

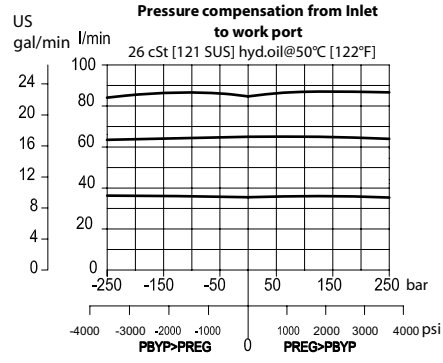

Schematic

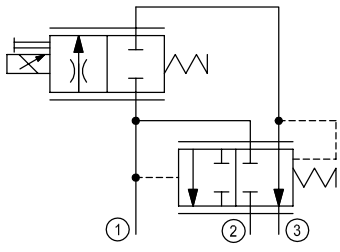

DIMENSIONS

mm [in]

Cross-sectional view

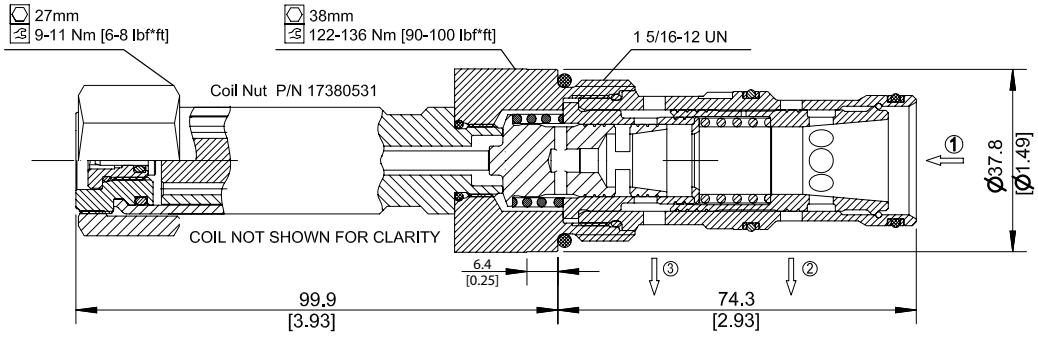

ORDERING INFORMATION

PFC16 – PC – 85 – 12D – DN – SPS – B – 00

Proportional Flow Control Valve, Pressure Compensated, Priority Type, Normally Closed, 16 Size Cavity

Code	Max regulated flow
85	85 l/m

Code	Coil Voltage
00	No Coil
12D	12V DC
24D	24 V DC

Code	Coil Termination
00	No Coil
AJ	Amp Junior
DE	Deutsch
DN	DIN 43650

Code*	Manual Override
Omit	Push Pin (Standard)
SPS	Screw Style (Push-Type Valve)

*PB (Push-Button) available upon request

Code	Seal	Seal Kit
B	Buna-N	354008919
V	Viton	354009019

Body & Ports	Body Nomenclature
00 = No housing	No Body
6B = Al, 3/4 BSP	SDC16-3-HE-6B
8B = Al, 1 BSP	SDC16-3-HE-8B
12S = Al, #12 SAE	CP16-3-12S
16S = Al, #16 SAE	CP16-3-16S
Other housings available	

Comatrol
RESPONSIVENESS IN MOTION
Member of the Danfoss Group

Proportional Valves Catalog

Flow Control, Pressure Compensated, Priority Type, Normally Open

PFC10-PO

OPERATION

This is a pressure-compensated, priority-type, normally-open, spool-type, proportional flow-control. Controlled flow is from port 1 to 3, port 2 is bypass.

SPECIFICATIONS

Rated pressure	260 bar [3770 psi]
Maximum flow at rated pressure	PFC10-PO-10: 10 l/min [2.64 US gal/min] PFC10-PO-25: 25 l/min [6.6 US gal/min] PFC10-PO-35: 35 l/min [9.25 US gal/min]
Leakage	420 cm^3/min [25.6 in^3/min] @ rated pressure
Weight including coil	0.72 kg [1.59 lb]
Hysteresis	8% maximum
Threshold current	0.1 A (12 VDC coil) 0.05 A (24 VDC coil)
Maximum control current	1.8 A (12 VDC coil) 0.9 A (24 VDC coil)
Cavity	SDC10-3
Standard Coil	M19P 22 Watt

Theoretical performance

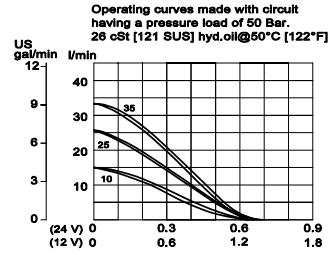

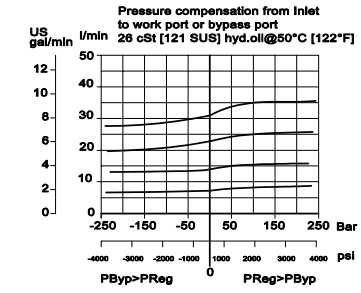

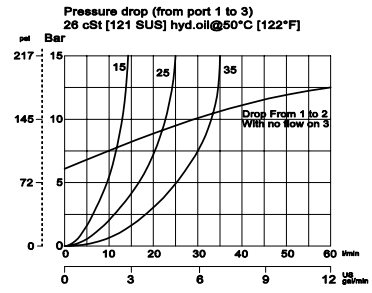

Schematic

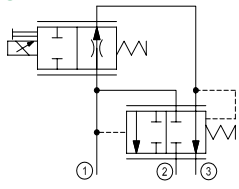

DIMENSIONS

mm [in]

Cross-sectional view

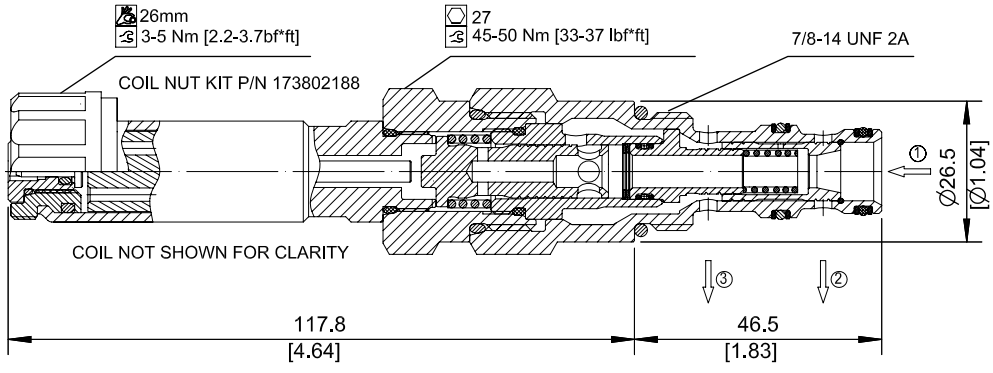

ORDERING INFORMATION

PFC10 – PO – 35 – 12D – DN – SPS - B - 00

Proportional Flow Control Valve, Pressure Compensated, Priority Type, Normally Open, 10 Size Cavity

Code	Max regulated flow
10	10 l/m
25	25 l/m
35	35 l/m

Code	Coil Voltage
00	No Coil
12D	12V DC
24D	24 V DC

Code	Coil Termination
00	No Coil
AJ	Amp Junior
DE	Deutsch
DN	DIN 43650

Code*	Manual Override
Omit	Push Pin (Standard)
SPS	Screw Style (Push-Type Valve)

*PB (Push-Button) available upon request

Code	Seal	Seal Kit
B	Buna-N	35400421
V	Viton	35400371

Body & Ports	Body Nomenclature
00 = No housing	No Body
6S = AI, #6 SAE	CP10-3-6S
8S = AI, #8 SAE	CP10-3-8S
SE3B = AI, 3/8" BSP	SDC10-3-SE3B
SE4B = AI, 1/2" BSP	SDC10-SE4B
Other housings available	

Comatrol
RESPONSIVENESS IN MOTION
Member of the Danfoss Group

Proportional Valves Catalog

Flow Control, Pressure Compensated, Priority Type, Normally Closed

PFC12-PO

OPERATION

This is a pressure-compensated, priority-type, normally-open, spool-type, proportional flow-control. Controlled flow is from port 1 to 3, port 2 is bypass.

SPECIFICATIONS

Rated pressure	260 bar [3770 psi]
maximum flow at rated pressure	PFC12-PO-50: 50 l/min [13.21 US gal/min] PFC12-PO-70: 70 l/min [8.5 US gal/min]
Leakage	420 cm^3/min [25.6 in^3/min] @ rated pressure
Weight	0.81 kg [1.79 lb]
Hysteresis	8% maximum
Threshold current	0.2 A (12 VDC coil) 0.1 A (24 VDC coil)
Maximum control current	1.8 A (12 VDC coil) 0.9 A (24 VDC coil)
Cavity	SDC12-3
Standard Coil	D14E(35W) 35 Watt

Theoretical performance

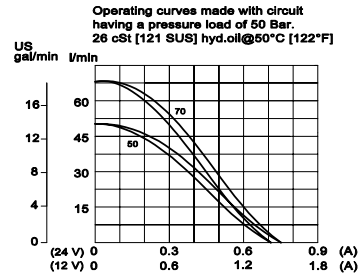

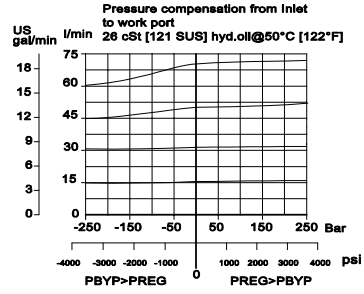

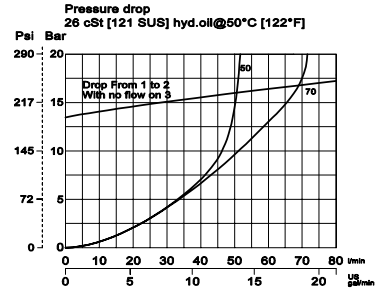

Schematic

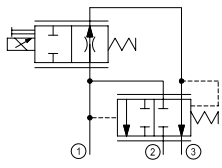

DIMENSIONS

mm [in]

Cross-sectional view

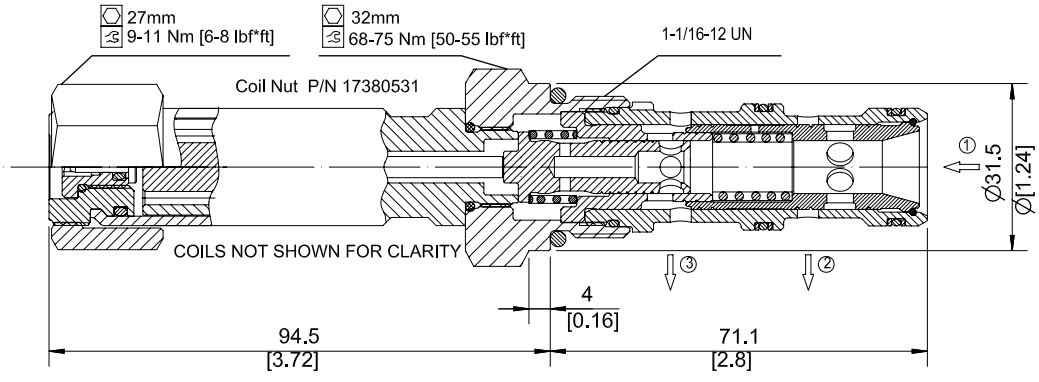

ORDERING INFORMATION

PFC12 – PO – 70 – 12D – DE – SPS – B – 00

Proportional Flow Control Valve, Pressure Compensated, Priority Type, Normally Open, 12 Size Cavity

Code	Max regulated flow
50	50 l/m
70	70 l/m

Code	Coil Voltage
00	No Coil
12D	12V DC
24D	24 V DC

Code	Coil Termination
00	No Coil
AJ	Amp Junior
DE	Deutsch
DN	DIN 43650

Code*	Manual Override
Omit	Push Pin (Standard)
SPS	Screw Style (Push-Type Valve)

*PB (Push-Button) available upon request

Code	Seal	Seal Kit
B	Buna-N	354008319
V	Viton	354008419

Body & Ports	Body Nomenclature
00 = No housing	No Body
10S = Al, #10 SAE	CP12-3-10S
12S = Al, #12 SAE	CP12-3-12S
4B = Al, 1/2 BSP	SDC12-3-HE4B
6B = Al, 3/4 BSP	SDC12-3-HE6B
Other housings available	

Comatrol
RESPONSIVENESS IN MOTION
Member of the Danfoss Group

Proportional Valves Catalog

Flow Control, Pressure Compensated, Priority Type, Normally Closed

PFC16-PO

OPERATION

This is a pressure-compensated, priority-type, normally-open, spool-type, proportional flow-control. Controlled flow is from port 1 to 3, port 2 is bypass.

SPECIFICATIONS

Rated pressure	260 bar [3770 psi]
Rated flow at 260 bar [3771 psi]	90 l/min [24 US gal/min]
Leakage	420 cm^3/min [25.6 in^3/min] @ rated pressure
Weight	0.97 kg [2.14 lb]
Hysteresis	8% maximum
Threshold current	0.1 A (12 VDC coil) 0.05 A (24 VDC coil)
Maximum control current	1.8 A (12 VDC coil) 0.9 A (24 VDC coil)
Cavity	SDC16-3
Standard Coil	D14E(35W) 35 Watt

Theoretical performance

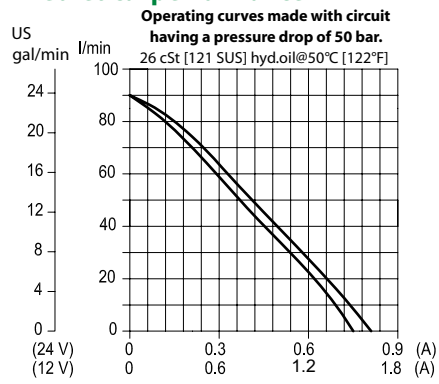

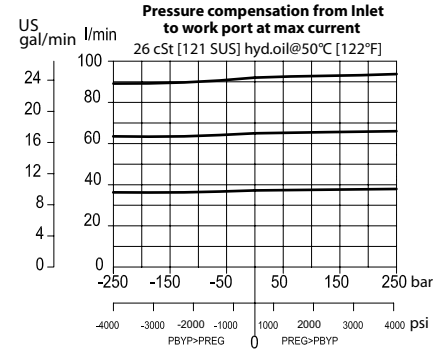

Schematic

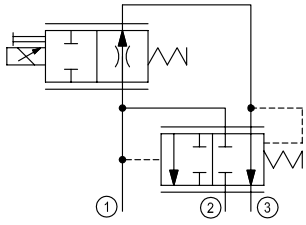

DIMENSIONS

mm [in]

Cross-sectional view

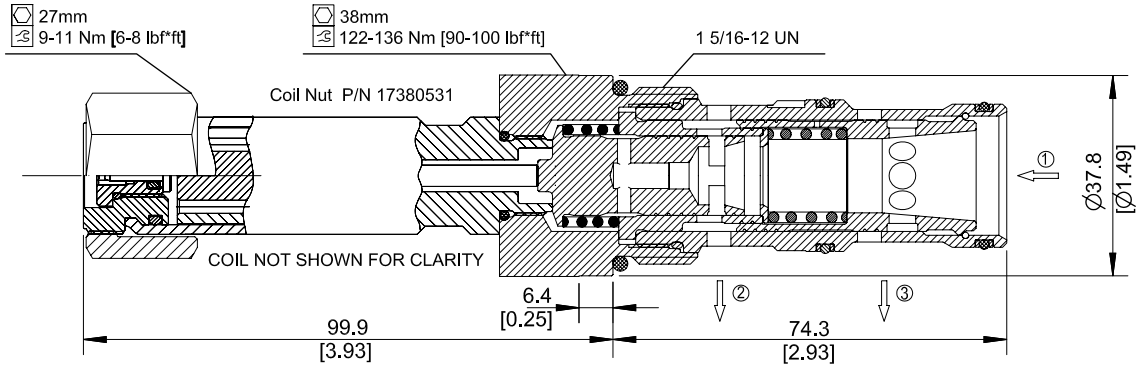

ORDERING INFORMATION

PFC16-PO - 90 - 12D - DE - SPS - B - 00

Proportional Flow Control, Pressure Compensated, Priority Type, Normally Open, 16 Size Cavity

Code	Max Regulated Flow
90	90 l/m

Code	Coil Voltage
00	No Coil
12D	12V DC
24D	24V DC

Code	Coil Termination
00	No Coil
AJ	Amp Junior
DE	Deutsch
DN	DIN 43650

Code*	Manual Override
Omit	Push Pin (Standard)
SPS	Screw Style (Push-Type Valve)

*PB (Push Button) available upon request

Housings & Ports	Housing P/N
00: Cartridge Only	No Housing
6B: 3/4 BSP, AL	SDC16-3-HE-6B
8B: 1 BSP, AL	SDC16-3-HE-8B
12S: #12 SAE, AL	CP16-3-12S
16S: #16 SAE, AL	CP16-3-16S

Other Housings available

Code	Seal Material	Seal kit
B	Buna	354008919
V	Viton	354009019

Comatrol
RESPONSIVENESS IN MOTION
Member of the Danfoss Group

Proportional Valves Catalog
Proportional Flow Divider
PFD10-OD

OPERATION

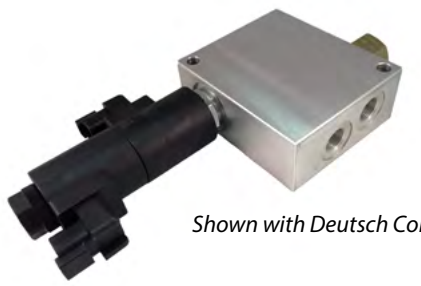

Shown with Deutsch Coils

PDF10-OD: Proportional Flow Divider, 10 Size, Normally Open, Divider
This is a proportional, compensated, normally open, flow dividing, pre-engineered HIC. When there is no current applied to the coils, the inlet flow is divided equally between ports A and B. As an example, if inlet flow is 40 LPM, the flow out Ports A and B will divide equally 20 LPM. The performance curve below shows input flow examples of 40, 20 and 10 LPM. Minimum inlet flow is 10 LPM (2.6 GPM). The flow ratio between ports A and B will proportionally vary as current is provided to coils S1 or S2. As current increases to coil S2, the flow to Port B will proportionally increase, while Port A decreases, as shown in the graph. Inversely, as current increases to coil S1, the flow to Port A will proportionally increase, while Port B decreases.
Note that this is not a combiner, the flow only exits Ports A and B. Connect the drain port DR to tank, limiting the pressure on this port to 50 bar (720 psi).

APPLICATIONS

Proportionally divide the input flow between two motors or hydraulic circuits (like HICs). Circuits that can take advantage of this pre-engineered HIC include any function where the motors or the HICs continuously require flow, and you only need to proportionally manage the amount of flow between them. Achieve repeatable, load-independent flow dividing with the built-in pressure compensator. See performance curve below for compensation capabilities.
Note: For optimal performance, install with the solenoid valve in the horizontal position, reducing the chance for trapped air in the valve.

SPECIFICATIONS

Rated Pressure	230 bar [3335 psi]	
Maximum Rated Flow	40 l/min [10.6 US gal/min]	
Maximum Pressure in Port DR	50 bar [720 psi]	
Minimum Inlet Flow	10 l/min [2.6 US gal/min]	
Weight including Coil	1.15 kg [2.53 lb]	
Coil	M16	26 Watts
Coil Voltage	12 V	24 V
Max. Control Current	1.5 Amp	0.75 Amp
Hysteresis	< 4%	

Schematic

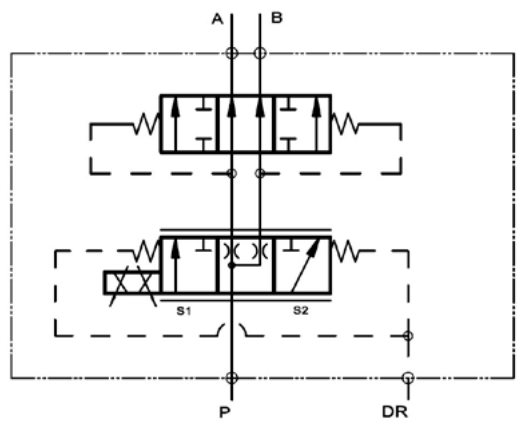

Performance Curves

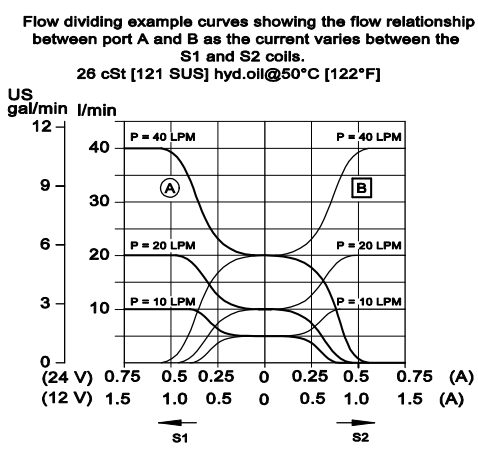

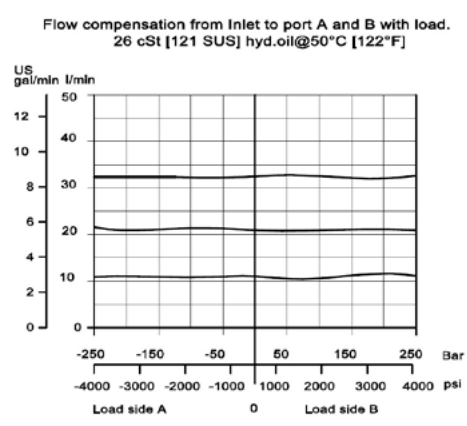

Comatrol
RESPONSIVENESS IN MOTION
Member of the Danfoss Group

Proportional Valves Catalog
Proportional Flow Divider
PFD10-OD

DIMENSIONS
mm [in]

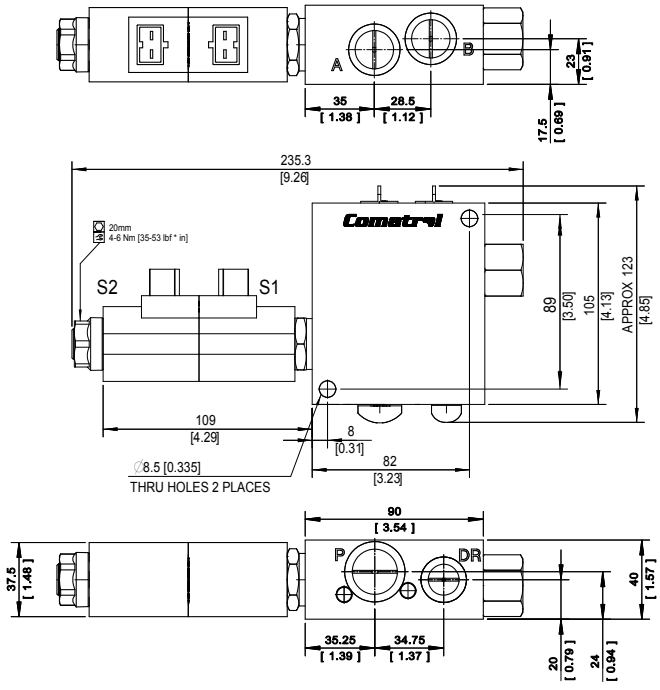

EXAMPLE CIRCUITS

Proportionally dividing flow between two motors

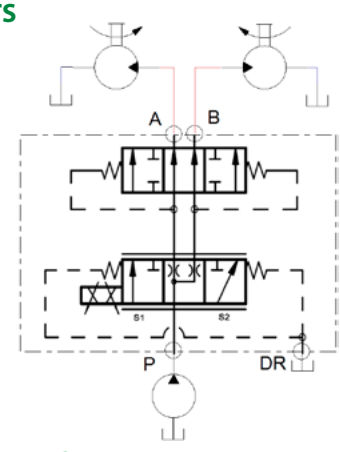

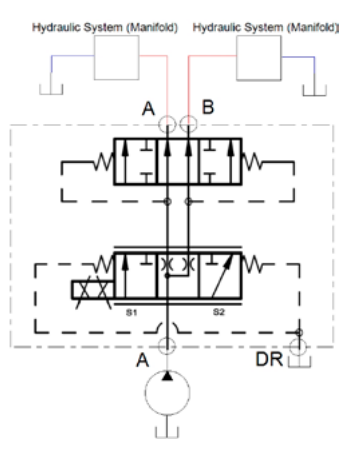

Proportionally dividing flow between two hydraulic systems (HICs)

ORDERING INFORMATION

PFD10-OD-40-24D-AJ-B-4B

Proportional Flow Divider, 10 Size, Normally Open, Dividing

Max inlet flow 40l/min

Coil voltage
12D = 12V DC
24D = 24V DC

Coil termination
FL = Flying Lead
DN = ISO 4400 (DIN 43650)
DE = Deutsch
AJ = Amp Junior
AS = Amp SuperSeal 1.5 and Metri-Pack 150 type 1

Body and Ports
4B = Aluminum, 1/2(P), 3/8(A,B), 1/4(D) BSPP
10S = Aluminum, #10 (P), #8(A,B), #6 (D) SAE

Seals	Seal Kit
B = Buna-N seals	35400191 For each valve in Manifold
V = Viton seals	35400201 For each valve in Manifold

Comatrol
RESPONSIVENESS IN MOTION
Member of the Danfoss Group

Proportional Valves Catalog

Pressure Reducing/Relieving, Piloted, Normally Closed

PPR10-PAC

OPERATION

This is a pilot-operated, proportional pressure-reducing/relieving valve (Normally closed).

SPECIFICATIONS

Rated pressure	250 bar (3625 psi]
Rated flow at 7 bar [100 psi]	18 l/min [5 US gal/min]
Weight	0.62 kg [1.37 lb]
Hysteresis	10% maximum
Threshold current	0 A (12 VDC coil) 0 A (24 VDC coil)
Maximum control current	1.4 A (12 VDC coil) 0.7 A (24 VDC coil)
Cavity	SDC10-3
Standard Coil	M19P 22 Watt

Theoretical performance

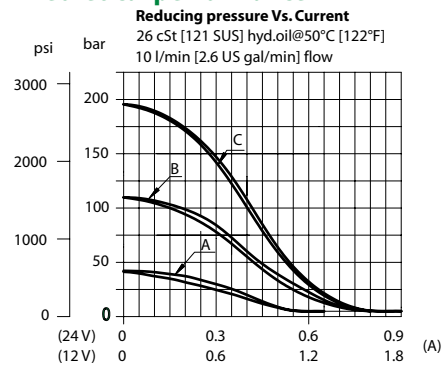

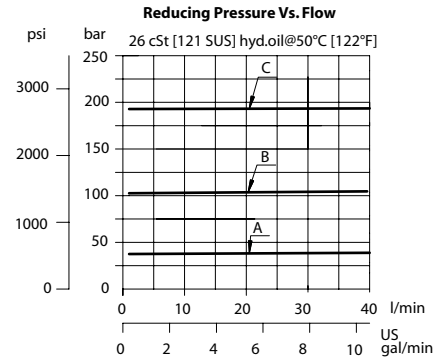

Schematic

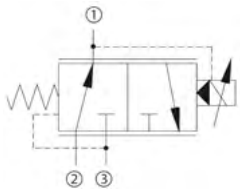

DIMENSIONS

mm [in]

Cross-sectional view

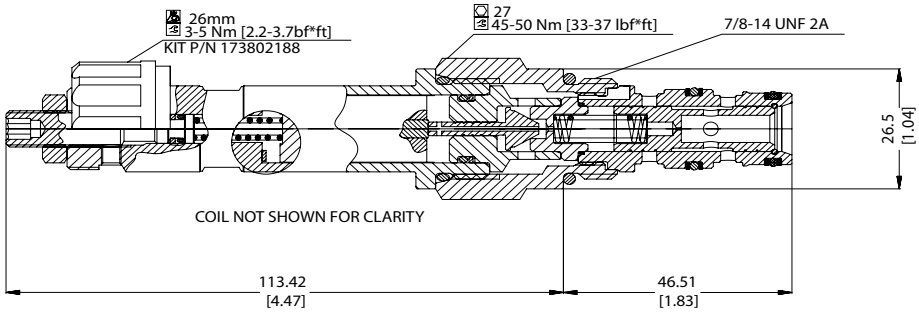

ORDERING INFORMATION

PPR10-PAC-40-A-12D-DN-B-00

Cracking pressure
Code = Setting in Bar
Std. setting
40 = 40 bar setting (type A)
100 = 100 bar setting (type B)
200 = 200 bar setting (type C)

Pressure range
A= 20 - 60 bar [360 - 940 psi] Max inlet pressure 150 Bar
B= 70 - 150 bar [960-2250 psi]
C= 160 - 210 bar [2260-3120 psi]

Coil voltage
12D=12VDC
24D=24VDC
00=No Coil

Housing and ports
00 = Cartridge only
6S = AI, #6 SAE
8S = AI, #8 SAE
SE3B = AI, 3/8" BSP
SE4B = AI, 1/2" BSP
Other housing available

Housing Nomenclature
No Body
CP10-3-6S
CP10-3-8S
SDC10-3-SE3B
SDC10-3-SE4B

Seals
B = Buna-N
V = Viton

Seals kit
354004210
354003719

Coil termination
00 = No coil, nut included
AJ= AMP Junior
DE= Deutsch
DN= DIN 46650
FL= Flying leads(140mm lead length standard)

Comatrol
RESPONSIVENESS IN MOTION
Member of the Danfoss Group

Proportional Valves Catalog
Pressure Reducing, Direct Acting, Normally Open
CP558-24

OPERATION

This valve is a direct acting, proportional, pressure reducing/relieving valve.

SPECIFICATIONS

Rated pressure	34 bar [500 psi]
Rated flow at 7 bar [100 psi]	4 l/min [1 US gal/min]
Weight	0.27 kg [0.60 lb]
Hysteresis	10% maximum
Threshold current	0.1 A (12 VDC coil) 0.05 A (24 VDC coil)
Maximum control current	1 A (12 VDC coil) 0.5 A (24 VDC coil)
Cavity	SDC08-3
Standard Coil	D08 16 Watt
Coil nut	322399

Theoretical performance

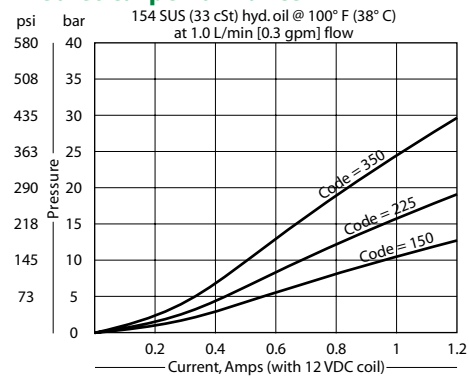

Schematic

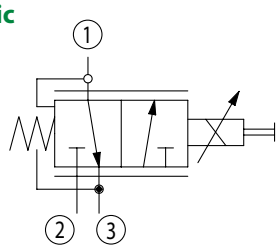

DIMENSIONS

mm [in]

Cross-sectional view

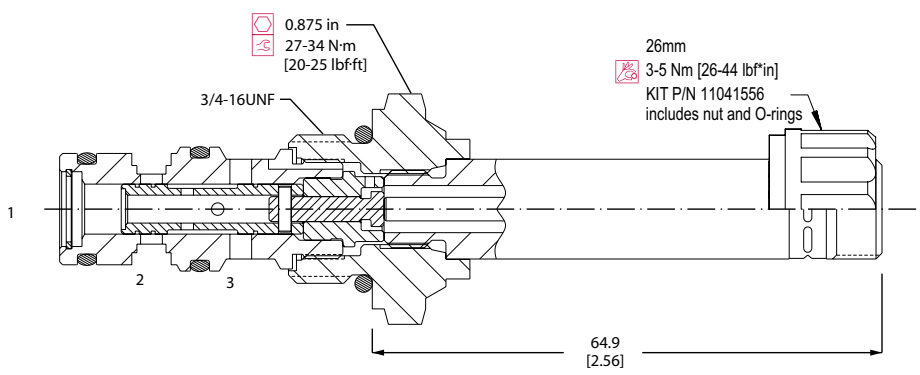

ORDERING INFORMATION

CP558-24-B-4S-150-12D-H

Seals

	Seal Kit
B = Buna-N	11016151
V = Viton	120708

Voltage
000 = No coil
12D = 12 VDC coil
24D = 24 VDC coil

Connector
0 = No connector
H = DIN 43650
L = Lead
S = Spade
AJ = Amp Junior
M2 = Metripak 150 Type 1
DE = Deutsch

Housing and ports
00 = No Housing
SE2B = AL,1/4 BSP
SE3B = AL, 3/8 BSP
4S = AL, #4 SAE
6S = AL, #6 SAE

Housing P/N
No Housing
SDC08-3-SE-2B
SDC08-3-SE-3B
CP08-3-4S
CP08-3-6S

Pressure Code
150 = 10.3 bar [150 psi]
225 = 15.5 bar [225 psi]
350 = 24.1 bar [350 psi]

Comatrol
RESPONSIVENESS IN MOTION
Member of the Danfoss Group

Proportional Valves Catalog
PPR09-POD

Shown with Standard Coil and Filter

Shown with Robust Coil and Filter

OPERATION

Proportional Pressure Reducing / Relieving Valve, Pilot Operated, Normally Open to Drain. With no current to the coil, the "reduced pressure" (port 3) is connected to drain (port 4), while blocking the inlet (port 2). As current is increased to the coil, inlet (port 2) is connected to "reduced pressure" (port 3), proportionally increasing the "reduced pressure" as shown on the performance curve(s). If the "reduced pressure" exceeds the setting induced by the coil, pressure is relieved to drain (port 4). This 09 Series valve uses a 10 size cavity with an 08 size tube and coil, providing an optimal product for high flow and low pressure, while minimizing pressure drop in the system. This valve was formerly branded as XRP 044.

APPLICATION

Common applications include low-pressure proportional pilot control of clutches or hydraulically piloting large directional spool valves. Refer to example circuits. Use the optional screen to help protect the actuator from large particles. Select the robust coil for those extreme environmental conditions – voltage extremes, high temperature, shock & vibration, chemicals, and/or water ingression.

SPECIFICATIONS

Rated pressure	50 bar [725 psi]
Rated flow at 7 bar [100 psi]	25 l/min [7 US gal/min]
Weight	0.34 kg [0.75 lb]
Hysteresis	6% maximum
Threshold current	0.15 A (12 VDC coil) 0.08 A (24 VDC coil)
Maximum control current	1.2 A (12 VDC coil) 0.6 A (24 VDC coil)
Cavity	SDC10-4
Standard Coil	M13 20 Watt
Robust Coil	R13 16 Watt Robust Nut P/N 173800539 No coil O-rings needed.

Schematic(s)

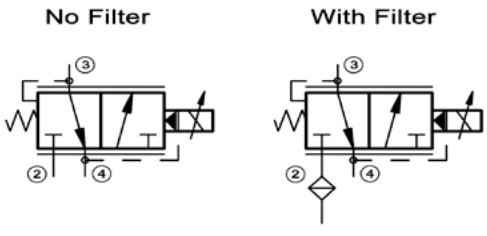

Performance Curves

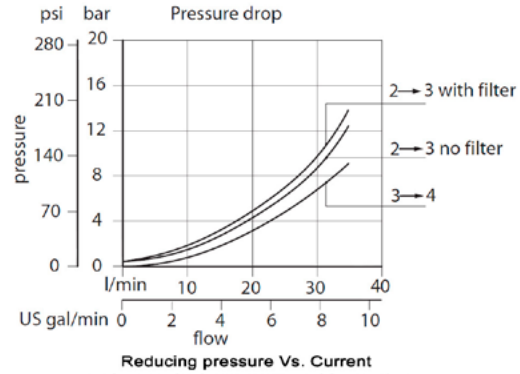

Reducing pressure Vs. Current
26 cSt [121 SUS] hyd.oil at 50°C [122 °F]
Standard Coil

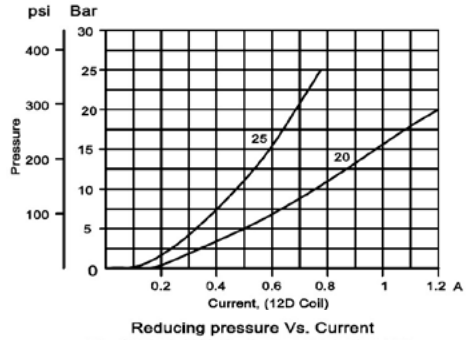

Reducing pressure Vs. Current
26 cSt [121 SUS] hyd.oil at 50°C [122 °F]
Robust Coil

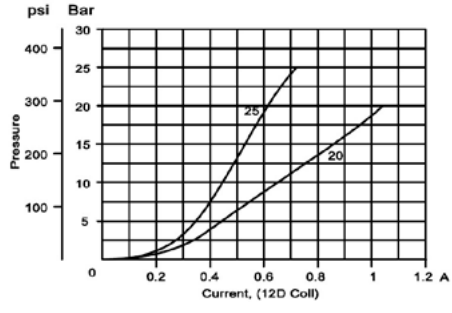

DIMENSIONS

mm [in]

Cross-sectional view

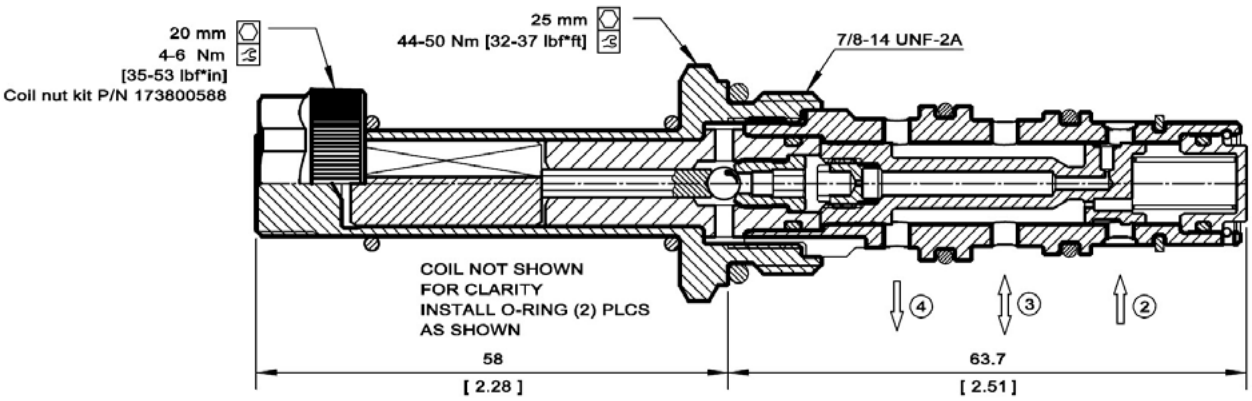

EXAMPLE APPLICATION CIRCUITS

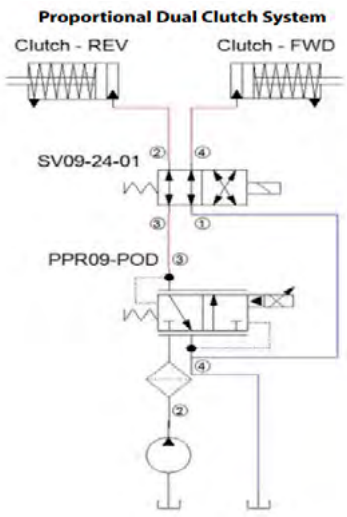

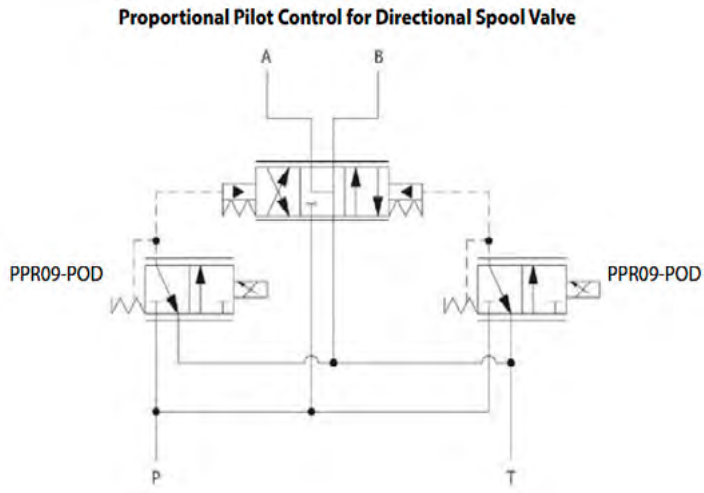

ORDERING INFORMATION

PPR09-POD - 25 -12D - DN - V - F - 00

Setting Range
20 = 0-20 bar [0-290 psi]
25 = 0-25 bar [0-360 psi]

Coil voltage
00 = No Coil
12D = 12 VDC (Standard Coil)
24D = 24 VDC (Standard Coil)
R12D = 12 VDC (R-Coil)
R24D = 24 VDC (R-Coil)

Coil termination:
00 = No Coil
FL = Flying Lead
DN = DIN 43650 *
DE = Deutsch
AJ = Amp Junior *
SP = Spade
AS = AMP SuperSeal 1.5 and Metri-Pack 150 type 1

* These terminations are not available on robust coil (R12D, R24D)

Body and ports
00 = No Housing
6S = AL, #6 SAE
8S = AL, #8 SAE
L3B= AL, 3/8 BSP
L4B= AL, 1/2 BSP
Other housings available

Body Nomenclature
No Body
CP10-4-6S
CP10-4-8S
SDC10-4-L-3B
SDC10-4-L-4B

Filter 300 µm
00 = No Filter
F = With Filter

Seals
B = Buna-N
V = Viton

Seals kit
230000760
230001030

Comatrol
RESPONSIVENESS IN MOTION
Member of the Danfoss Group

Proportional Valves Catalog

Pressure Reducing/Relieving, Piloted, Normally Closed

XRP 06

OPERATION

This is a pilot-operated, proportional pressure reducing/relieving valve.

SPECIFICATIONS

Rated pressure	315 bar [4500 psi]
Rated flow at 7 bar [100 psi]	25 l/min [7 US gal/min]
Weight	0.55 kg [1.21 lb]
Hysteresis	3% maximum
Threshold current	0 A (12 VDC coil) 0 A (24 VDC coil)
Maximum control current	1.8 A (12 VDC coil) 0.9 A (24 VDC coil)
Cavity	NCS06/3
Standard Coil	M19P 22 Watt

Theoretical performance

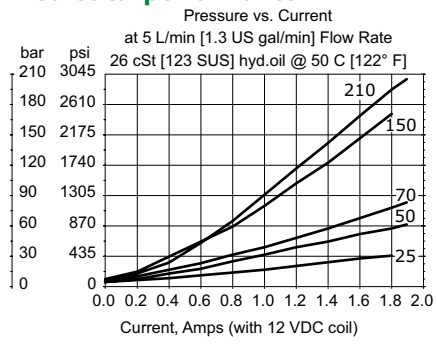

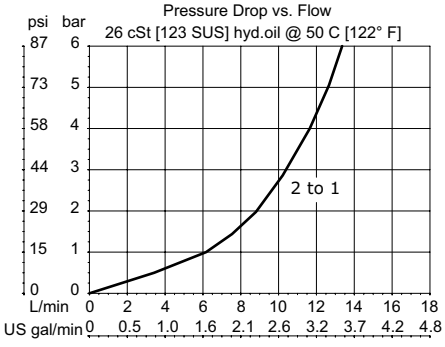

Schematic

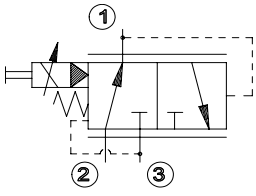

DIMENSIONS

mm [in]

Cross-sectional view

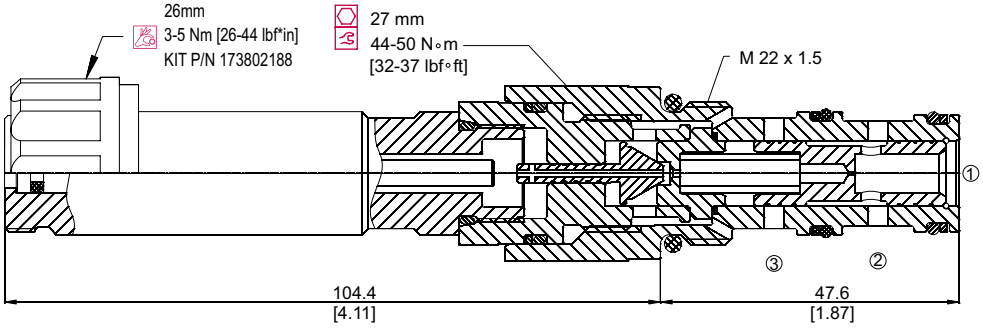

ORDERING INFORMATION

XRP 06 - 70 - 12D -DE - EN - 00 V

Setting range
25 = 6-25 bar [90-360 psi]
50 = 6-55 bar [90-800 psi]
70 = 5-75 bar [90-1100 psi]
150 = 8-155 bar [120-2200 psi]
210 = 9-210 bar [130-3100 psi]

Voltage
00 = No coil
12D = 12VDC
24D = 24VDC

Termination
00 = No connector
AJ = AMP Jr
DE = Deutsch
DN = DIN 43650 (ISO 4400)
DN1 = "DN" w/Connector
FL600 = Lead wires

Manual override
00 = Push control (Standard)
EN = Screw control

Housing and ports

		Housing P/N
00	= No Housing	No Housing
SE6S	= AL, #6 SAE	NCS06/3-SE-6S
SE8S	= AL, #8 SAE	NCS06/3-SE-8S
SE3/8	= AL, 3/8 BSP	NCS06/3-SE-3/8
SE1/2	= AL, 1/2 BSP	NCS06/3-SE-1/2

Seals
V = Viton
Omit = Buna-N

Seals
230000110
230000070

11141718 • Rev CB • March 2018

Comatrol
RESPONSIVENESS IN MOTION
Member of the Danfoss Group

Proportional Valves Catalog
Pressure Relieving, Direct Acting, Normally Closed
PRV08-DAC

OPERATION

This is a direct acting, normally closed, proportional pressure relief valve.

SPECIFICATIONS

Rated pressure	215 bar [3120 psi]
Maximum recommended flow	155 bar option: 3.78 l/min [1.0 US gal/min] 215 bar option: 2.84 l/min [0.75 US gal/min]
Hysteresis	5% maximum
Threshold current	0 A (12 VDC coil) 0 A (24 VDC coil
Maximum control current	0.8 A (12 VDC coil) 0.4 A (24 VDC coil)
Standard maximum setting options	155 bar [2250 psi] 215 bar [3120 psi]
Cavity	SDC08-2
Coil	R13 16 Watt

Note: A PWM frequency of 50 Hz is recommended for optimal performance.

Theoretical performance

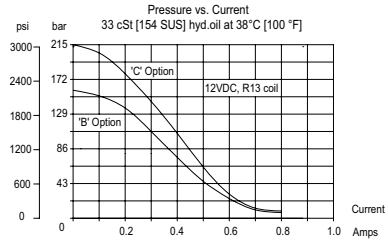

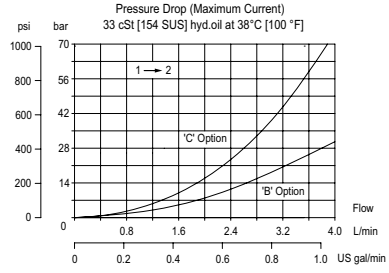

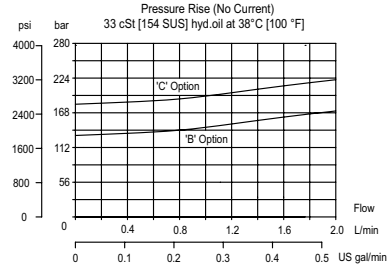

Schematic

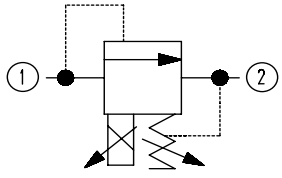

DIMENSIONS

mm [in]

Cross-sectional view

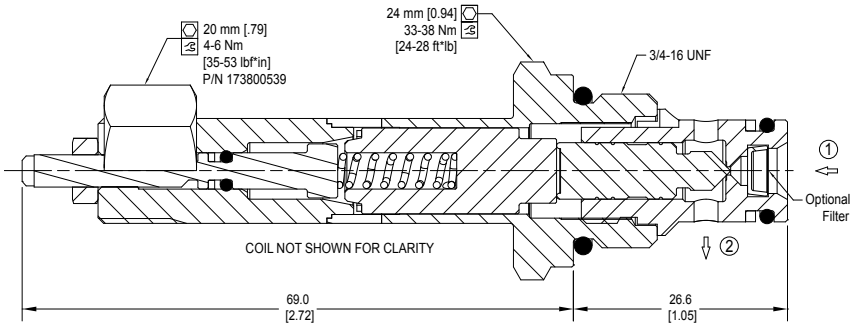

ORDERING INFORMATION

PRV08-DAC-215-C-E-R12D-AS-B-F-S6S

Proportional Relief Valve, 08 Size, Direct Acting, Normally Closed

Pressure Setting

Option	Setting Code (10 bar inc.)
B	65-155 Bar (940-2250 psi)
C	155-215 Bar (2250-3120 psi)

Maximum Pressure Option

Code	Max Pressure
B	155 Bar (2250 psi)
C	215 Bar (3120 psi)

Adjustment Option

Code	Adjustment Option
E	External

Coil Voltage

Description	Code
No Coil, with nut	**R00**
12 VDC	**R12D**
24 VDC	**R24D**

Coil Termination

Type	Code
AMP SuperSeal 1.5	**AS**
AMP SuperSeal with Diode	**ASDB**
Deutsch	**DE**
Desutch with Diode	**DEDB**
Flying Leads	**FL**
Flying Leads with Diode	**FLDB**
Metri-Pack 150 Type 2	**M3**
Metri-Pack 150 with Diode	**M3DB**

Housing and Ports

Code	Ports & Material	Body Nomenclature
00	Cartridge Only	No Body
4S	#4 SAE, AL	CP08-2-4S
6S	#6 SAE, AL	CP08-2-6S
DG-2B	1/4 BSP, AL	SDC08-2-DG-3B
DG-3B	3/8, BSP, AL	SDC08-2-DG-3B
S4S	#4 SAE, DUCTILE	CP08-2-S4S
S6S	#6 SAE, DUCTILE	CP08-2-S6S

Filter Option

Code	Option
F	Filter
Omit	No Filter

Seal Option

Code	Material	Seal Kits
B	Buna	11191986
V	Viton	11191987

Comatrol
RESPONSIVENESS IN MOTION
Member of the Danfoss Group

Proportional Valves Catalog

Pressure Relieving, Direct Acting, Normally Closed

HPRV08-DAC

OPERATION

This is a direct acting, normally closed, proportional pressure relief valve.

SPECIFICATIONS

Rated pressure	350 bar [5075 psi]
Maximum recommended flow	1.89 l/min [0.5 US gal/min]
Hysteresis	5% maximum
Threshold current	0 A (12 VDC coil) 0 A (24 VDC coil
Maximum control current	0.8 A (12 VDC coil) 0.4 A (24 VDC coil)
Standard maximum setting	350 bar [5075 psi]
Cavity	SDC08-2
Coil	R13 16 Watt

Note: A PWM frequency of 50 Hz is recommended for optimal performance.

Theoretical performance

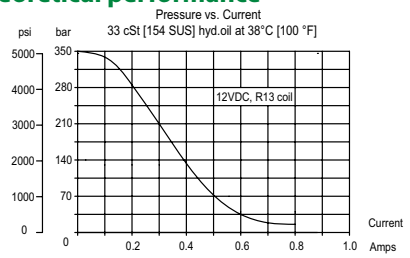

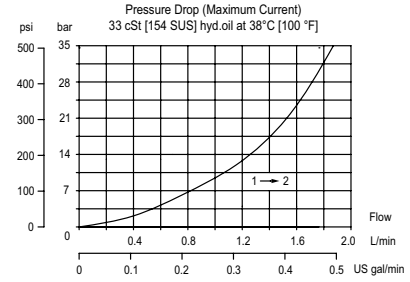

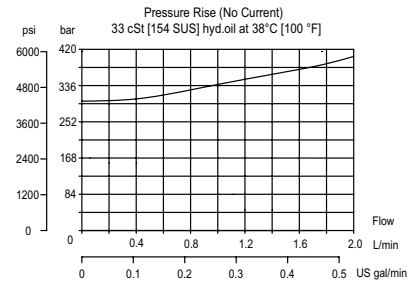

Schematic

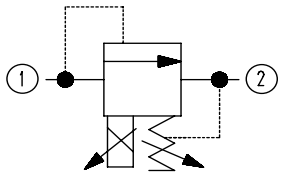

DIMENSIONS

mm [in]

Cross-sectional view

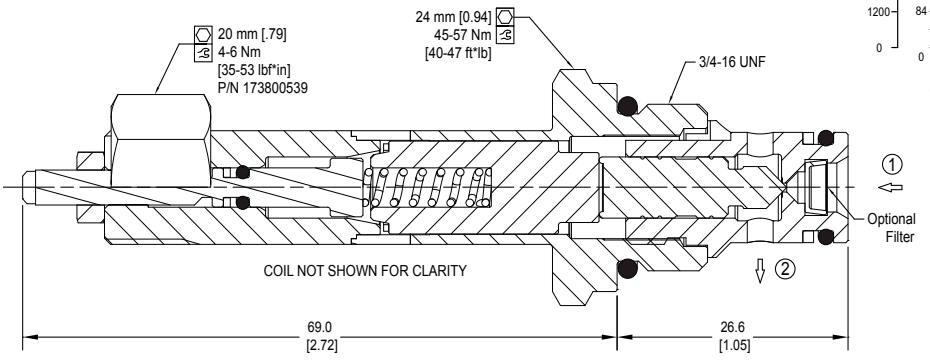

ORDERING INFORMATION

HPRV08-DAC-350-D-E-R12D-DE-B-F -4S

High Pressure, Proportional Relief Valve, 08 Size, Direct Acting, Normally Closed

Pressure Setting

Option	Setting Code (10 bar inc.)
D	215-350 Bar (3120-5075 psi)

Maximum Pressure Option

Code	Max Pressure
D	350 Bar (5075 psi)

Adjustment Option

Code	Adjustment Option
E	External

Coil Voltage

Description	Code
No Coil, with nut	R00
12 VDC	R12D
24 VDC	R24D

Coil Termination

Type	Code
AMP SuperSeal 1.5	AS
AMP SuperSeal with Diode	ASDB
Deutsch	DE
Desutch with Diode	DEDB
Flying Leads	FL
Flying Leads with Diode	FLDB
Metri-Pack 150 Type 2	M3
Metri-Pack 150 with Diode	M3DB

Housing and Ports

Code	Ports & Material	Body Nomenclature
00	Cartridge Only	No Body
S4S	#4 SAE, DUCTILE	CP08-2-S4S
S6S	#6 SAE, DUCTILE	CP08-2-S6S

Filter Option

Code	Option
F	Filter
Omit	No Filter

Seal Option

Code	Material	Seal Kits
B	Buna	11191986
V	Viton	11191987

Comatrol
RESPONSIVENESS IN MOTION
Member of the Danfoss Group

Proportional Valves Catalog
Pressure Relieving, Direct Acting, Normally Open
XMD 04

OPERATION

This is a direct-acting normally-open, proportional relief valve.

SPECIFICATIONS

Rated pressure	250 bar [3600 psi]
Rated flow	5 l/min [1 US gal/min]
Weight	0.44 kg [0.97 lb]
Hysteresis	3% maximum
Threshold current	0 A (12 VDC coil) 0 A (24 VDC coil)
Maximum control current	1.8 A (12 VDC coil) 0.9 A (24 VDC coil)
Cavity	NCS04/2
Standard Coil	M19P 22 Watt

Theoretical performance

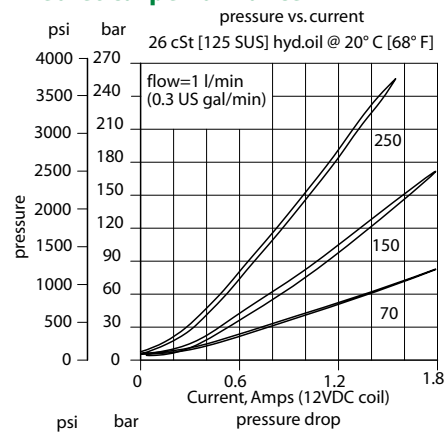

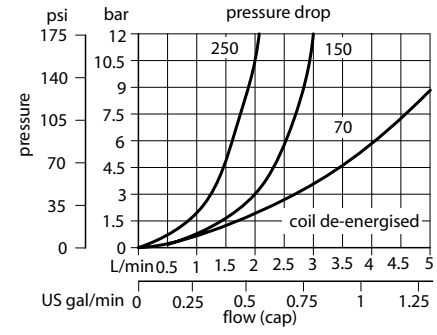

Schematic

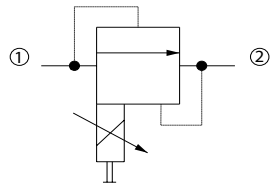

DIMENSIONS

mm [in]

Cross-sectional view

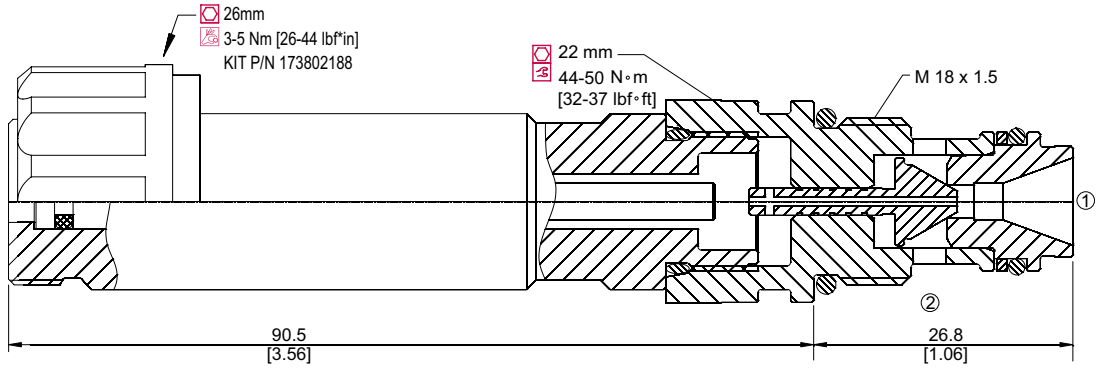

ORDERING INFORMATION

XMD 04 – 70 – 24D – DE – EN – 00 – V

Proportional Relief Valve, Pilot Operated, Normally Open, 04 Size Cavity (Metric)

Code	Setting Range
70	3-70 bar [44-1015 psi]
150	5-150 bar [73-2176 psi]
250	7-250 bar [102-3626 psi]

Code	Coil Voltage
00	No Coil
12D	12V DC
24D	24 V DC

Code	Coil Termination
00	No Coil
AJ	Amp Junior
DE	Deutsch
DN	DIN 43650
DN1	DIN w/ Connector

Code	Manual Override
00	Push Pin (Standard)
EN	Screw Style

Body & Ports	Body Nomenclature
00 = No housing	No Body
DG-4S = AL, #4 SAE	NCS04/2-DG-4S
DG-6S = AL, #6 SAE	NCS04/2-DG-6S
DG-1/4 = AL,1/4 BSP	NCS04/2-DG-1/4

Code	Seal	Seal Kit
Omit	Buna-N	230000390
V	Viton	230000190

Comatrol
RESPONSIVENESS IN MOTION
Member of the Danfoss Group

Proportional Valves Catalog
Pressure Relieving, Direct Acting, Normally Open
CP558-20

OPERATION

This is a direct-acting normally-open, proportional relief valve.

SPECIFICATIONS

Rated pressure	210 bar [3000 psi]
Rated flow	8 l/min [2 US gal/min]
Weight	0.48 kg [1.06 lb]
Hysteresis	10% maximum
Threshold current	0 A (12 VDC coil) 0 A (24 VDC coil)
Maximum control current	1.2 A (12 VDC coil) 0.6 A (24 VDC coil)
Cavity	SDC08-2
Standard Coil	D10 30 Watt
Coil nut	321978

Theoretical performance

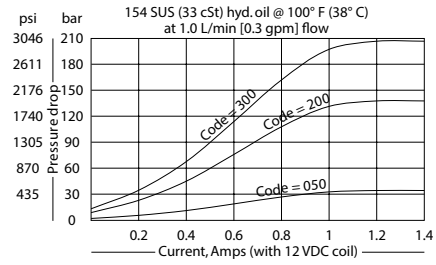

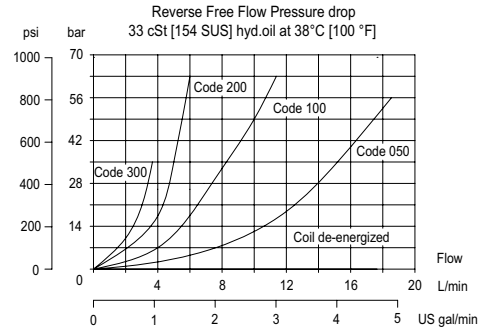

Schematic

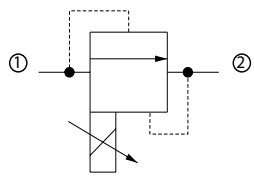

DIMENSIONS

mm [in]

Cross-sectional view

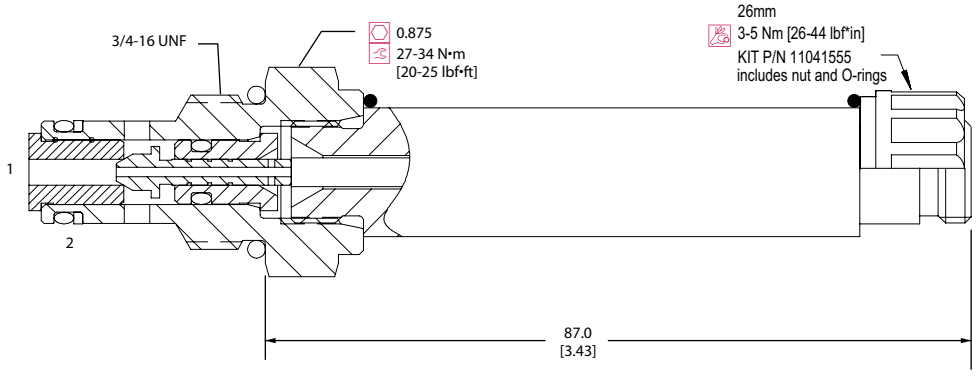

ORDERING INFORMATION

CP558 - 20 - B - 6S - 300 - 24D - H

Seals

B = Buna-N
V = Viton

Seal kit
120221
120222

Housing and ports

0 = No Housing
DG2B = AL,1/4 BSP
DG3B = AL, 3/8 BSP
4S = AL, #4 SAE
6S = AL, #6 SAE
Other housings available

Housing P/N

No Housing
SDC08-2-DG-2B
SDC08-2-DG-3B
CP08-2-4S
CP08-2-6S

Pressure code

050 = 35 bar [500 psi] max
100 = 69 bar [1000 psi] max
200 = 138 bar [2000 psi] max
300 = 207 bar [3000 psi] max

Voltage

000 = No coil
12D = 12 VDC coil
24D = 24 VDC coil

Termination

00 = No connector
H = DIN 43650
L = Lead wires
DE = Deutsch
M2 = Metripack 150 Type 1
S = Spade

Comatrol
RESPONSIVENESS IN MOTION
Member of the Danfoss Group

Proportional Valves Catalog
Relief, Pilot Operated, Normally Closed
PRV10-POC

OPERATION

This is a normally-closed, pilot-operated, proportional relief valve.

SPECIFICATIONS

Rated pressure	250 bar [3600 psi]
Rated flow	76 l/min [20 US gal/min]
Weight	0.53 kg [1.17 lb]
Hysteresis	10% maximum
Threshold current	0 A (12 VDC coil) 0 A (24 VDC coil)
Maximum control current	1.4 A (12 VDC coil) 0.7 A (24 VDC coil)
Cavity	SDC10-2
Standard Coil	M19P 22 Watt

Theoretical performance

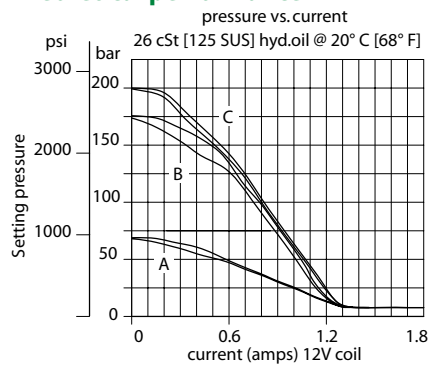

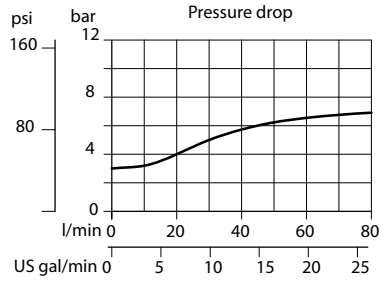

Schematic

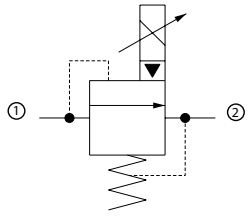

DIMENSIONS

mm [in]

Cross-sectional view

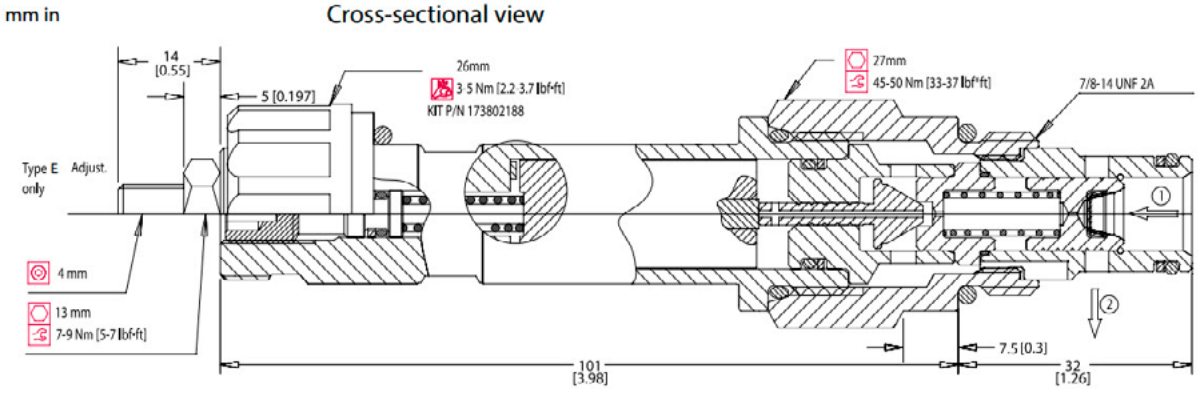

ORDERING INFORMATION

PRV10 – POC* – 215 – C – 12D – DE – E – B – 00

Proportional Pressure Relieving Valve, Pilot Operated, Normally Closed, 10 Size Cavity

Code	Crack Pressure (Standard Settings)
55	55 bar [800 psi] Range A
135	135 bar 1960 B [psi] Range B
215	215 bar 3120 C [psi] Range C

Code	Pressure Range
A	25 - 65 bar [360 - 940 psi]
B	65 - 155 bar [940-2250 psi]
C	155 - 215 bar [2250-3120 psi]

Code	Coil Voltage
00	No Coil
12D	12V DC
24D	24 V DC

Code	Coil Termination
00	No Coil
AJ	Amp Junior
DE	Deutsch
DN	DIN 43650

Code	Adjustment Options
E	External
F	Tamper Resistant
H	Hidden

Code	Seal	Seal Kit
B	Buna-N	354000719
V	Viton	354000819

Body & Ports	Body Nomenclature
00 = No housing	No Body
6S = Al, #6 SAE	CP10-2-6S
8S = Al, #8 SAE	CP10-2-8S
DG3B = Al, 3/8 BSP	SDC10-2-DG3B
DG4B = Al, 1/2 BSP	SDC10-2-DG4B
Other housings available	

*PRV10-IS2 is the same valve as PRV10-POC, with the following differences:
1) The IS2 uses the M19P-12L or M19P-24L coil (low power)
2) the pressure is set at a higher flow.

The IS2 is designed specifically for fan drive applications where the valve is in a hot ambient engine compartment.

Comatrol
RESPONSIVENESS IN MOTION
Member of the Danfoss Group

Proportional Valves Catalog
Relief, Pilot Operated, Normally Closed
PRV12-POC

OPERATION

This is a normally-closed, pilot-operated, proportional relief valve.

SPECIFICATIONS

Rated pressure	250 bar [3600 psi]
Rated flow	180 l/min [48 US gal/min]
Weight	0.62 kg [1.37 lb]
Hysteresis	10% maximum
Threshold current	0 A (12 VDC coil) 0 A (24 VDC coil)
Maximum control current	1.5 A (12 VDC coil) 0.8 A (24 VDC coil)
Cavity	SDC12-2
Standard Coil	M19P 22 Watt

Theoretical performance

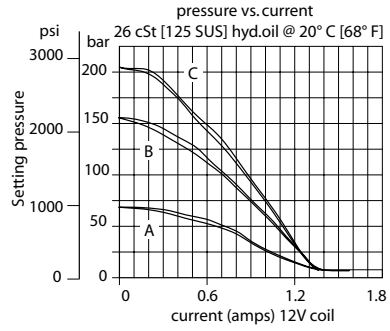

Schematic

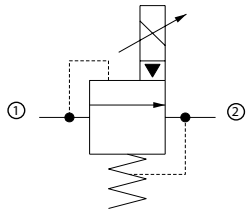

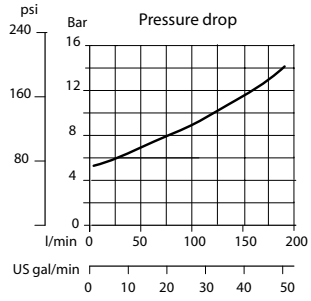

DIMENSIONS

mm [in]

Cross-sectional view

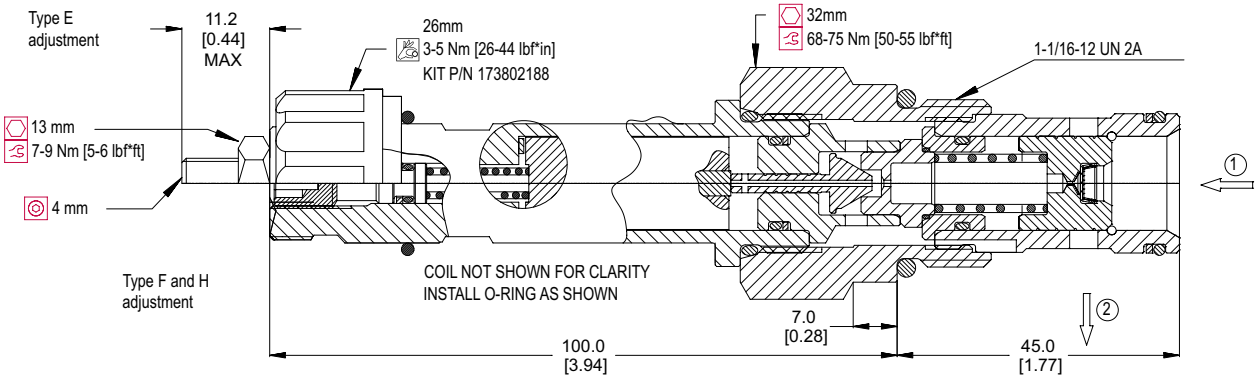

ORDERING INFORMATION

PRV12 – POC* – 215 – C – 12D – DE – E – B – 00

Proportional Pressure Relieving Valve, Pilot Operated, Normally Closed, 12 Size Cavity

Code	Crack Pressure (Standard Settings)
55	55 bar [800 psi] Range A
135	135 bar 1960 B [psi] Range B
215	215 bar 3120 C [psi] Range C

Code	Pressure Range
A	25 - 65 bar [360 - 940 psi]
B	65 - 155 bar [940-2250 psi]
C	155 - 215 bar [2250-3120 psi]

Code	Coil Voltage
00	No Coil
12D	12V DC
24D	24 V DC

Code	Coil Termination
00	No Coil
AJ	Amp Junior
DE	Deutsch
DN	DIN 43650

Code	Adjustment Options
E	External
F	Tamper Resistant
H	Hidden

Body & Ports	Body Nomenclature
00 = No housing	No Body
10S = AL, #10 SAE	CP12-2-10S
12S = AL, #12 SAE	CP12-2-12S
DG4B = Al, 1/2 BSP	SDC12-2-DG4B
DG6B = Al, 3/4 BSP	SDC12-2-DG6B
Other housings available	

Code	Seal	Seal Kit
B	Buna-N	354001319
V	Viton	354001819

*PRV12-IS2 is the same valve as PRV12-POC, with the following differences:
1) The -IS2 uses the M19P-12L or M19P-24L coil (low power)
2) the pressure is set at a higher flow.

The IS2 is designed specifically for fan drive applications where the valve is in a hot ambient engine compartment.

Comatrol
RESPONSIVENESS IN MOTION
Member of the Danfoss Group

Proportional Valves Catalog
Relief, Pilot Operated, Normally Open
XMP 06

OPERATION

This is a pilot-operated, normally-open, proportional relief valve.

SPECIFICATIONS

Rated pressure	315 bar [4500 psi]
Rated flow	50 l/min [13 US gal/min]
Weight	0.53 kg [1.17 lb]
Hysteresis	3% maximum
Threshold current	0 A (12 VDC coil) 0 A (24 VDC coil)
Maximum control current	1.8 A (12 VDC coil) 0.9 A (24 VDC coil)
Cavity	NCS06/2
Standard Coil	M19P 22 Watt

Theoretical performance

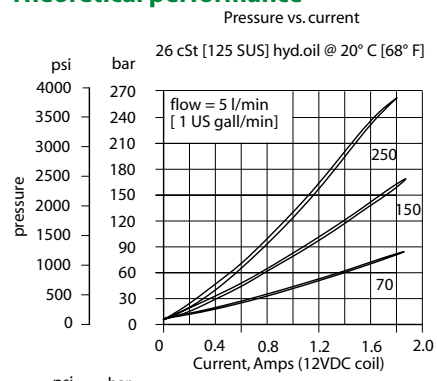

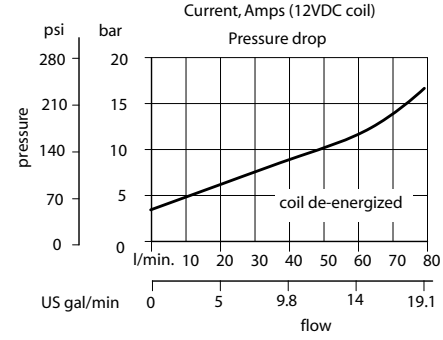

Schematic

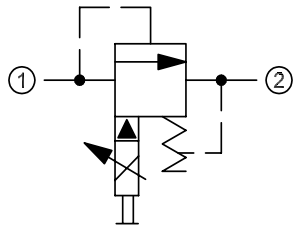

DIMENSIONS

mm [in]

Cross-sectional view

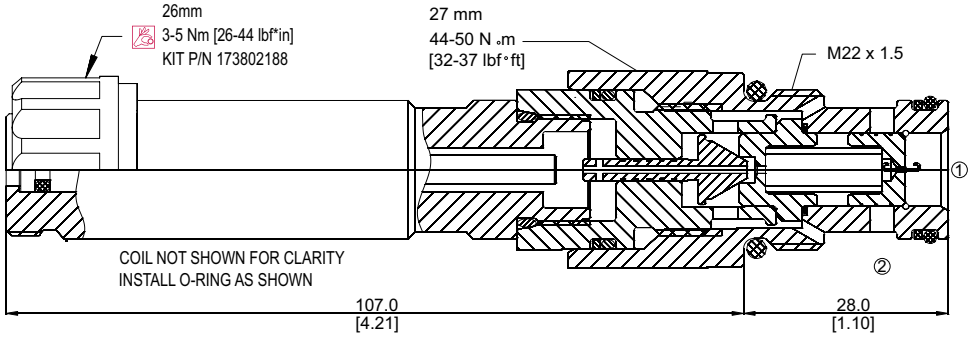

ORDERING INFORMATION

XMP 06 – 70 – 24D – DE – EN – 00 – V

Proportional Relief Valve, Pilot Operated, Normally Open, 06 Size Cavity (Metric)

Code	Setting Range
70	3-70 bar [44-1015 psi]
150	5-150 bar [73-2176 psi]
250	7-250 bar [102-3626 psi]

Code	Coil Voltage
00	No Coil
12D	12V DC
24D	24 V DC

Code	Coil Termination
00	No Coil
AJ	Amp Junior
DE	Deutsch
DN	DIN 43650
DN1	DIN w/ Connector

Code	Manual Override
00	Push Pin (Standard)
EN	Screw Style

Body & Ports	Body Nomenclature
00 = No housing	No Body
DG-6S = Al, #6 SAE	NCS06/2-DG-6S
DG-8S = Al, #8 SAE	NCS06/2-DG-8S
DG-3/8 = Al, 3/8" BSP	NCS06/2-DG-3/8
DG-1/2 = Al, 1/2" BSP	NCS06/2-DG-1/2

Code	Seal	Seal Kit
Omit	Buna-N	230000380
V	Viton	230000060