Comatrol

RESPONSIVENESS IN MOTION

Member of the Danfoss Group

Sequence & Unloading Valves

www.comatrol.com

Comatrol
RESPONSIVENESS IN MOTION
Member of the Danfoss Group

Sequence Valves Catalog
Quick Reference

Sequence	Model No.	Cavity	Description	Flow*	Pressure	Page
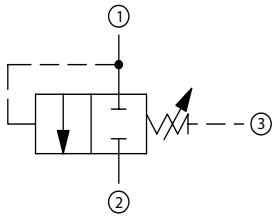	CP240-8	SDC10-3	Sequence Valve, 2-Way, Normally Closed	55 l/min [14 US gal/min]	210 bar [3000 psi]	SQ - 9
	CP241-8	CP12-3S		206 l/min [39 US gal/min]	206 bar [3000 psi]	SQ - 10

Sequence	Model No.	Cavity	Description	Flow*	Pressure	Page
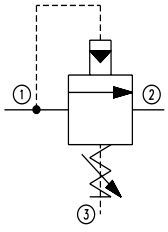	CP240-21	SDC10-3	Sequence Valve, Pilot Operated Spool	45 l/min [12 US gal/min]	350 bar [5075 psi]	SQ - 11
	CP241-21	CP12-3S		75 l/min [20 US gal/min]	350 bar [5075 psi]	SQ - 12

Sequence	Model No.	Cavity	Description	Flow*	Pressure	Page
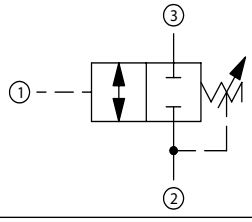	CP240-2	SDC10-3	Sequence Valve, 2-Way, Normally Closed, External Pilot, Internal Drain	35 l/min [9 US gal/min]	210 bar [3000 psi]	SQ - 13

Kick Down Type	Model No.	Cavity	Description	Flow*	Pressure	Page
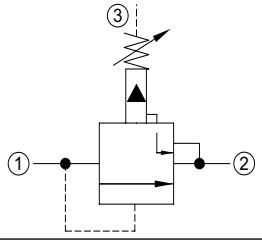	CP240-22	SDC10-3	Sequence Valve, Kick-Down Type	45 l/min [12 US gal/min]	350 bar [5075 psi]	SQ - 14

Sequence	Model No.	Cavity	Description	Flow*	Pressure	Page
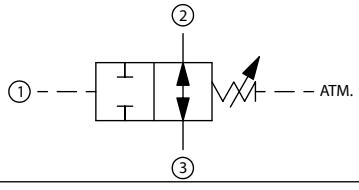	VDP 06/NA	NCS06/3	Sequence Valve, 2-Way, Normally Open	25 l/min [7 US gal/min]	315 bar [4500 psi]	SQ - 15

* Flow ratings are based on a pressure drop of 7 bar [100 psi] unless otherwise noted. They are for comparison purposes only.

Comatrol
RESPONSIVENESS IN MOTION
Member of the Danfoss Group

Sequence Valves Catalog
Quick Reference

Sequence	Model No.	Cavity	Description	Flow*	Pressure	Page
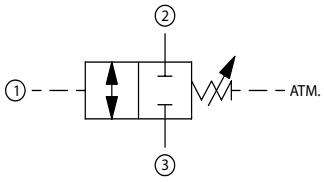	VDP 06/NC	NCS06/3	Sequence Valve, 2-Way, Normally Closed	25 l/min [7 US gal/min]	315 bar [4500 psi]	SQ - 16

Sequence	Model No.	Cavity	Description	Flow*	Pressure	Page
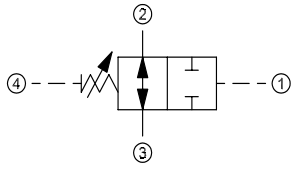	CP240-5	SDC10-4	Sequence Valve, 2-Way, Normally Open	25 l/min [7 US gal/min]	210 bar [3000 psi]	SQ - 17

Sequence	Model No.	Cavity	Description	Flow*	Pressure	Page
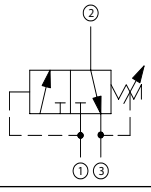	CP240-1	SDC10-3	Sequence Valve, 3-Way	25 l/min [7 US gal/min]	210 bar [3000 psi]	SQ - 18

Sequence	Model No.	Cavity	Description	Flow*	Pressure	Page
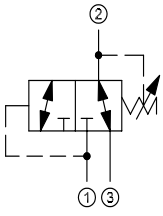	CP240-9	SDC10-3	Sequence Valve, 3-Way	20 l/min [5 US gal/min]	210 bar [3000 psi]	SQ - 19

Sequence	Model No.	Cavity	Description	Flow*	Pressure	Page
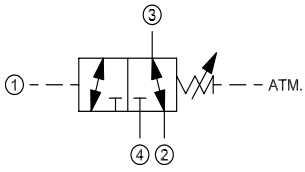	VDP 06/4201	NCS06/4	Sequence Valve, 3-Way	22 l/min [6 US gal/min]	315 bar [4500 psi]	SQ - 20

* Flow ratings are based on a pressure drop of 7 bar [100 psi] unless otherwise noted. They are for comparison purposes only.

Comatrol
RESPONSIVENESS IN MOTION
Member of the Danfoss Group

Sequence Valves Catalog
Quick Reference

Unloading	Model No.	Cavity	Description	Flow*	Pressure	Page
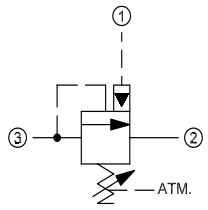	VDB 06-CN	NCS06/3	Unloading Valve, Differential Area, Pilot Operated, Atmospheric Vented	80 l/min [21 US gal/min]	350 bar [5075 psi]	SQ - 21

Unloading	Model No.	Cavity	Description	Flow*	Pressure	Page
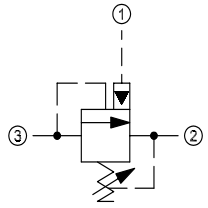	VDB 06-EN	NCS06/3	Unloading Valve, Differential Area, Pilot Operated	80 l/min [21 US gal/min]	350 bar [5075 psi]	SQ- 22
	VDB 12-EN	NCS12/3		160 l/min [42 US gal/min]	350 bar [5075 psi]	SQ- 23

Unloading	Model No.	Cavity	Description	Flow*	Pressure	Page
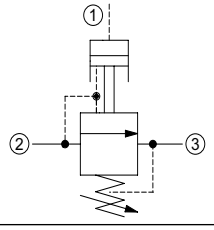	CP240-30	SDC10-3	Unloading Valve, Pilot Operated	4 l/min [1 US gal/min]	240 bar [3500 psi]	SQ- 24

Unloading	Model No.	Cavity	Description	Flow*	Pressure	Page
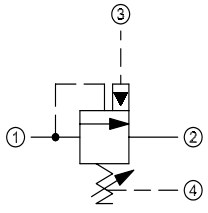	AUV 06	NCS06/4	Unloading Valve, Pilot Operated, Spool	50 l/min [13 US gal/min]	250 bar [3600 psi]	SQ - 25

* Flow ratings are based on a pressure drop of 7 bar [100 psi] unless otherwise noted. They are for comparison purposes only.

Comatrol
RESPONSIVENESS IN MOTION
Member of the Danfoss Group

Sequence Valves Catalog
Application Notes

SEQUENCE VALVES

As the name implies, sequence valves control a sequence of operations. Sequence valves usually use a pressure signal to shift a spool, thereby opening or closing a flow path at a pre-set pressure.

Sequence valves

DIRECT-ACTING SEQUENCE VALVES

Direct-acting sequence valves are spool-type valves with a spring force holding the spool closed. When inlet pressure exceeds the spring setting, the spool shifts to direct flow to a second function.

Direct-acting sequence valves come in a variety of configurations:

- Internally-piloted with external drain
- Internally-piloted with internal drain
- Externally-piloted with internal drain

Direct-acting sequence valves are best suited for fairly constant flow and lower pressures.

Internal-pilot with external drain

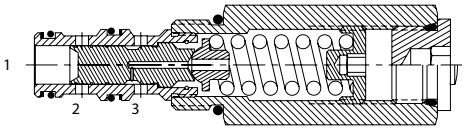

Internal-pilot with internal drain

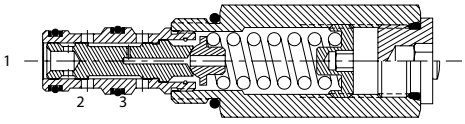

External-pilot with internal drain

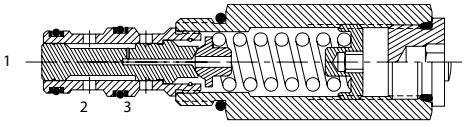

PILOT-OPERATED SEQUENCE VALVES

Also available are pilot-operated sequence valves that have an internal pilot and an external drain.

Pilot-operated sequence valves are best suited for higher and more widely varying flows, and higher pressures.

Pilot operated sequence valve

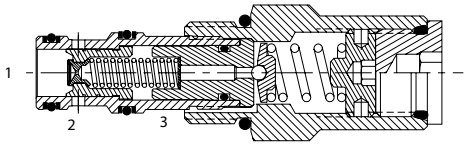

KICK-DOWN SEQUENCE VALVES

Another type of pilot-operated sequence valve is commonly known as a kick-down sequence valve. The kick-down sequence valve blocks flow at 1 until sufficient pressure exists at 1 to force the pilot poppet off it's seat. This creates a pressure differential across the spool that causes the spool to shift and open flow from 1 to 2. The spool will remain open until flow through the valve is shut off.

A common application for a kick-down sequence valve is as a safety device in circuits where overloading or overheating could cause damage if pressure is held for an extended period of time.

Kick-down sequence valve

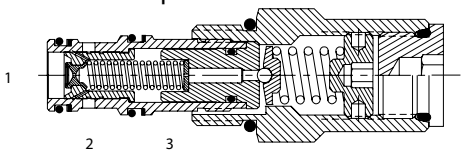

UNLOADING VALVES

Another type of sequence valve is commonly known as an unloading valve. The unloading valve blocks flow at 2 until sufficient pressure exists at 1 to pilot the poppet open against the pre-determined spring setting and allow flow from 2 to 3. If the pressure at 1 drops below the pilot ratio value multiplied by the pre-determined spring setting the valve will close, blocking flow at 2 .

Various pilot ratio values are available; consult catalog sheets for details.

An unloading valves is typically used to *unload* a pump outlet to tank at a minimum pressure drop, resulting in higher system efficiencies with less heat generation.

Unloading valve

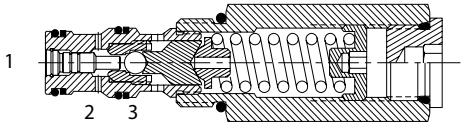

APPLICATIONS

Unloading valves

Common applications for unloading valves include:

- Pump unloading in an accumulator charging system

Accumulator charging/unloading valve

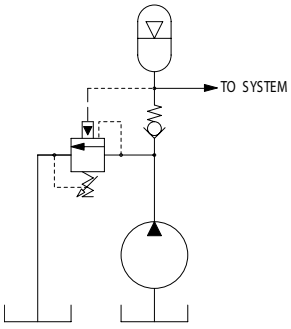

- For higher flow rates the unloading valve may be used to pilot a larger logic element

Accumulator charging/unloading pilot valve

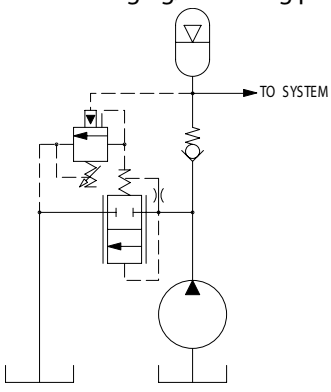

- Pump unloading in a 2 pump high-low circuit

High-low pump unloading

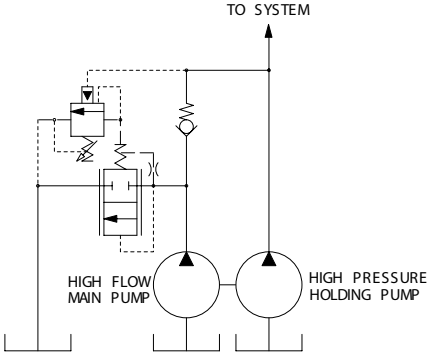

APPLICATIONS (continued)

Sequence valves

Both direct-acting and pilot-operated sequence valves have many common applications including:

- Providing a sequenced series of operations such as in a clamp and lift circuit

Clamp & lift circuit

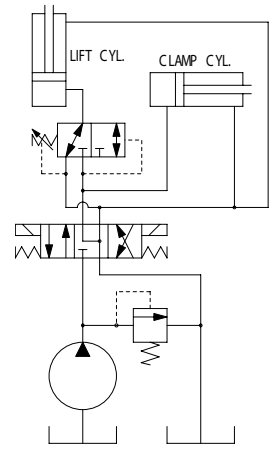

- Use as a relief valve where the return line has high or varying backpressure. The independent spring chamber drain line provides a relief setting unaffected by downstream pressure.

Sequence valve as relief

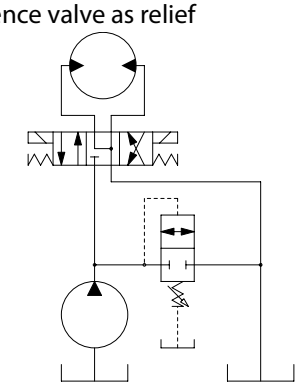

Comatrol
RESPONSIVENESS IN MOTION
Member of the Danfoss Group

Sequence Valves Catalog
2-Way, Normally Closed
CP240-8

OPERATION

Valve blocks flow from 1 to 2 until sufficient pressure is applied at 1

SPECIFICATIONS

Theoretical performance

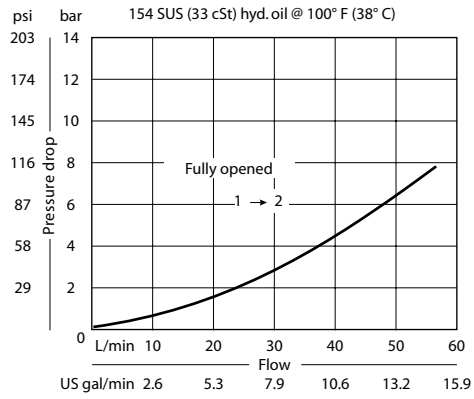

Schematic

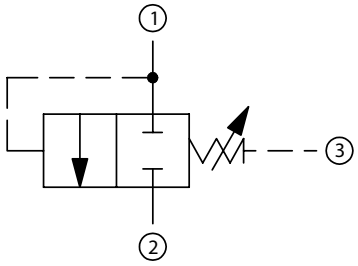

Specifications

Rated pressure	210 bar [3000 psi]
Rated flow at 7 bar [100 psi]	55 l/min [14 US gal/min]
Weight	0.26 kg [0.57 lb]
Cavity	SDC10-3

DIMENSIONS

mm [in]

Cross-sectional view

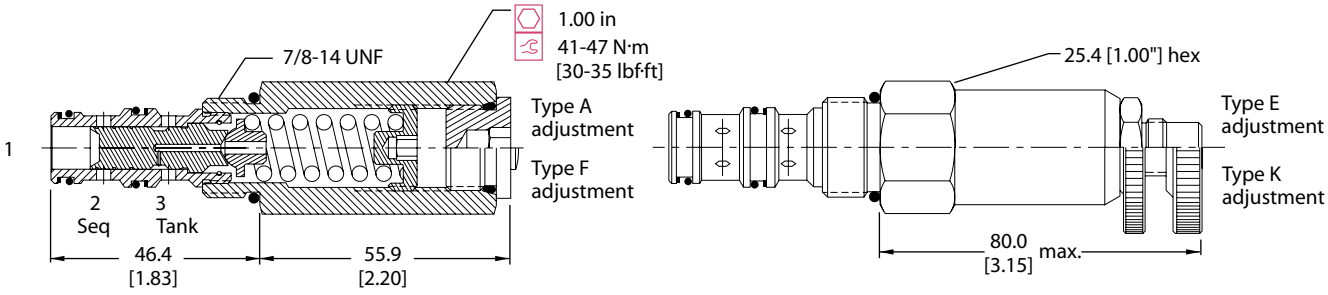

ORDERING INFORMATION

CP240 - 8 - B - 6S - A - C-050

Seals
B = Buna-N
V = Viton

Seal kit
120027
120028

Housing and ports

0	=	No Housing
SE3B	=	Al, 3/8 BSP
SE4B	=	Al, 1/2 BSP
6S	=	Al, #6 SAE
8S	=	Al, #8 SAE

Other housings available

Housing P/N

No Housing
SDC10-3-SE-3B
SDC10-3-SE-4B
CP10-3-6S
CP10-3-8S

Adjustment option
A = Internal
E = External
F = Tamper resistant
K = Knob

Crack pressure
Code x 10 = psi
Example: 100 = 1000 psi

Pressure range

	bar	[psi]
A =	4-28	[50-400]
Std. setting	17	[250]
B =	5-55	[75-800]
Std. setting	28	[400]
C =	7-97	[100-1400]
Std. setting	69	[1000]
D =	34-166	[500-2400]
Std. setting	103	[1500]

Comatrol
RESPONSIVENESS IN MOTION
Member of the Danfoss Group

Sequence Valves Catalog
2-Way, Normally Closed
CP241-8

OPERATION

Valve blocks flow from 1 to 2 until sufficient pressure is applied at 1.

SPECIFICATIONS

Theoretical performance

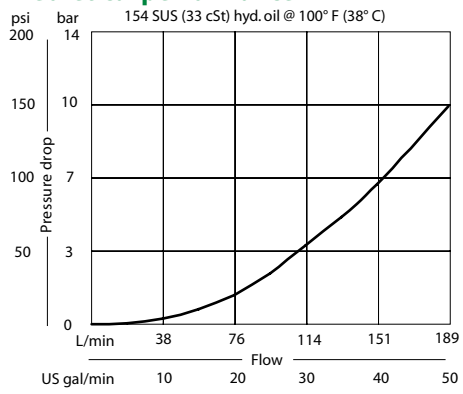

Schematic

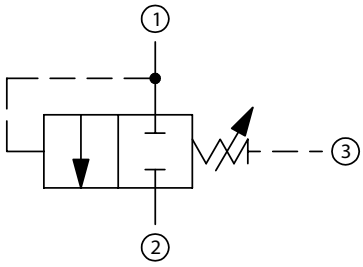

Specifications

Rated pressure	206 bar [3000 psi]
Rated flow at 7 bar [100 psi]	150 l/min [39 US gal/min]
Weight	0.41 kg [0.90 lb]
Cavity	CP12-3S

DIMENSIONS

mm [in]

Cross-sectional view

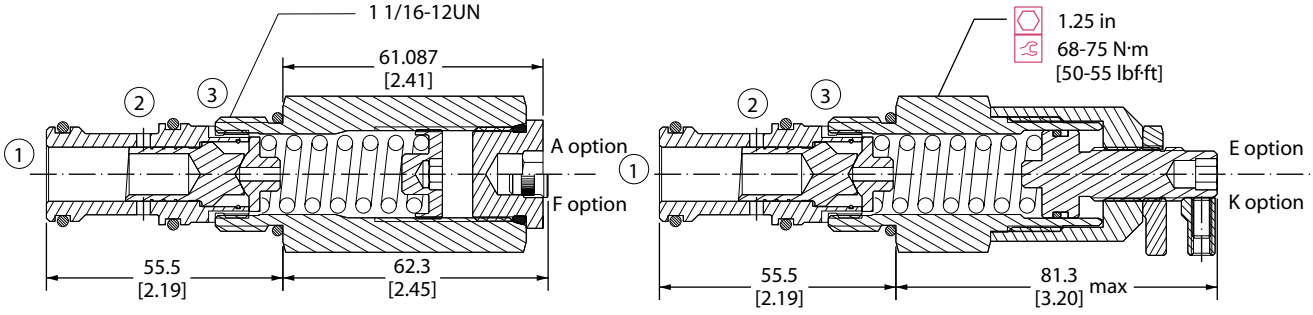

ORDERING INFORMATION

CP241-8-B-10S-A-C-050

Pressure setting
Code x 10psi (0.69 bar)
Example: 050 = 500 psi (35 bar)

Pressure range
A = 1-10 bar [13-150 psi]
B = 3.4-28 bar [50-400 psi]
C = 5.5-41 bar [80-600 psi]

Adjustment option
A = Internal
E = External
F = Tamper resistant
K = Knob

Housing and ports

			Housing P/N
0	=	No Housing	No Housing
4B	=	Al, 1/2 BSP	CP12-3S-4B/2B
6B	=	Al, 3/4 BSP	CP12-3S-6B/2B
10S	=	Al, #10 SAE	CP12-3S-10S/4S
12S	=	Al, #12 SAE	CP12-3S-12S/4S

Other housings available

Seals
B= Buna-N
V= Viton

Seal kit
120680
120681

Comatrol
RESPONSIVENESS IN MOTION
Member of the Danfoss Group

Sequence Valves Catalog
Pilot Operated Spool
CP240-21

OPERATION

Valve is a pilot-operated sequence valve that blocks flow from 1 to 2 until sufficient pressure is applied at 1.

SPECIFICATIONS

Theoretical performance

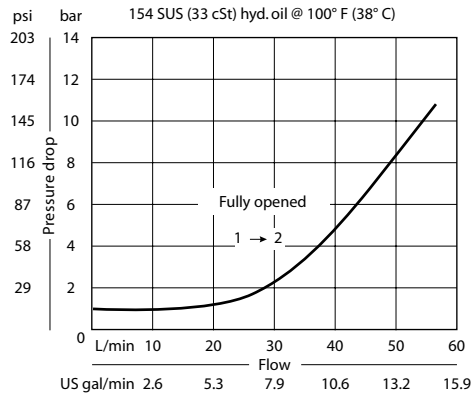

Schematic

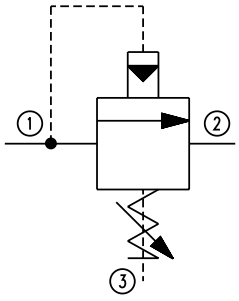

Specifications

Rated pressure	350 bar [5075 psi]
Rated flow at 7 bar [100 psi]	45 l/min [12 US gal/min]
Weight	0.23 kg [0.51 lb]
Cavity	SDC10-3

DIMENSIONS

mm [in]

Cross-sectional view

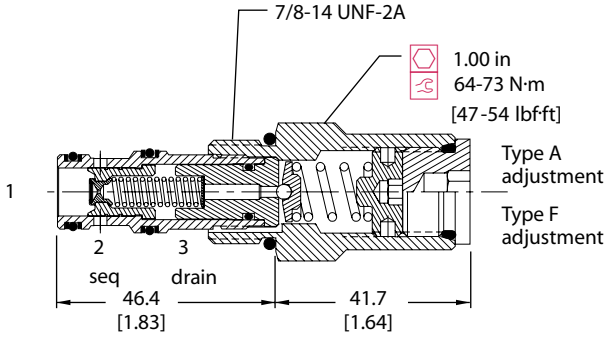

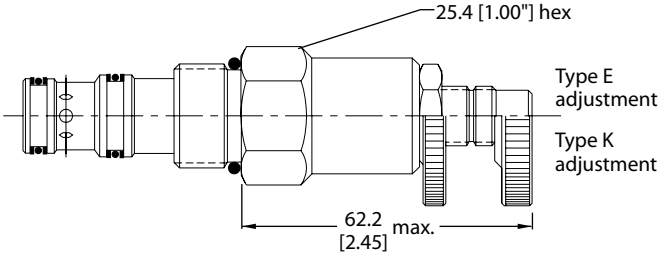

ORDERING INFORMATION

CP240 - 21 - B - 6S - A - C -150

Seals

			Seal kit
B	=	Buna-N	120009
V	=	Viton	120010

Housing and ports

			Housing P/N
0	=	No Housing	No Housing
SE3B	=	Al, 3/8 BSP	SDC10-3-SE-3B
SE4B	=	Al, 1/2 BSP	SDC10-3-SE-4B
6S	=	Al, #6 SAE	CP10-3-6S
8S	=	Al, #8 SAE	CP10-3-8S

Other housings available

Adjustment option

A	=	Internal
E	=	External
F	=	Tamper resistant
K	=	Knob

Crack pressure

Code x 10 = psi
Example: 150 = 1500 psi

Pressure range

		bar	[psi]
A	=	14-55	[200-800]
Std. setting		28	[400]
B	=	21-103	[300-1500]
Std. setting		69	[1000]
C	=	28-207	[400-3000]
Std. setting		103	[1500]
D	=	28-345	[400-5000]
Std. setting		103	[1500]

Comatrol
RESPONSIVENESS IN MOTION
Member of the Danfoss Group

Sequence Valves Catalog
Pilot Operated Spool
CP241-21

OPERATION

Valve is a pilot-operated sequence valve that blocks flow from 1 to 2 until sufficient pressure is applied at 1.

SPECIFICATIONS

Theoretical performance

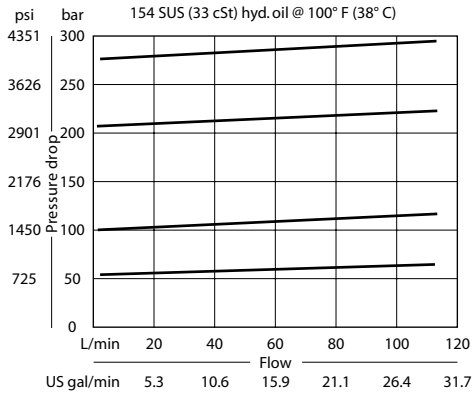

Schematic

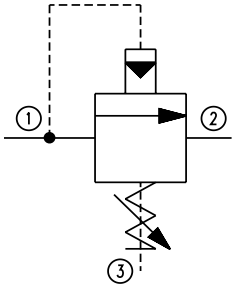

Specifications

Rated pressure	350 bar [5075 psi]
Rated flow at 7 bar [100 psi]	75 l/min [20 US gal/min]
Weight	0.17 kg [0.37 lb]
Cavity	CP12-3S

DIMENSIONS

mm [in]

Cross-sectional view

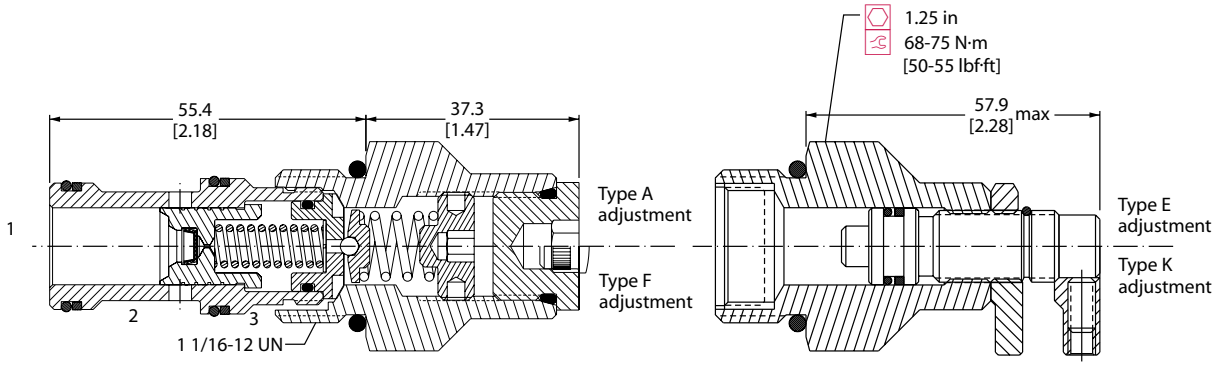

ORDERING INFORMATION

CP241 - 21 - B - 6S - A - C - 150

Seals
B = Buna-N — Seal kit 120335
V = Viton — Seal kit 120336

Housing and ports — **Housing P/N**

0	=	No Housing	No Housing
4B	=	Al, 1/2 BSP	CP12-3S-4B/2B
6B	=	Al, 3/4 BSP	CP12-3S-6B/2B
10S	=	Al, #10 SAE	CP12-3S-10S/4S
12S	=	Al, #12 SAE	CP12-3S-12S/4S

Other housings available

Adjustment option
A = Internal
E = External
F = Tamper resistant
K = Knob

Crack pressure
Code x 10 = psi
Example: 150 = 1500 psi

Pressure range

	bar	[psi]
A =	14-55	[200-800]
Standard	28	[400]
B =	21-103	[300-1500]
Standard	69	[1000]
C =	28-207	[400-3000]
Standard	103	[1500]
D =	28-345	[400-5000]
Standard	103	[1500]

Comatrol
RESPONSIVENESS IN MOTION
Member of the Danfoss Group

Sequence Valves Catalog

2-Way, Normally Closed, External Pilot, Internal Drain
CP240-2

OPERATION

Valve blocks between 2 and 3 until sufficient pilot pressure is applied at 1 to open the valve. Note that pressure at 2 is additive to the spring setting.

SPECIFICATIONS

Theoretical performance

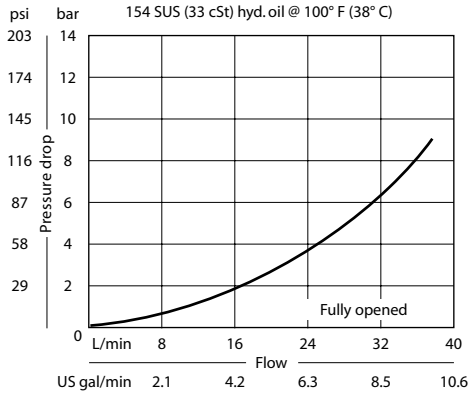

Schematic

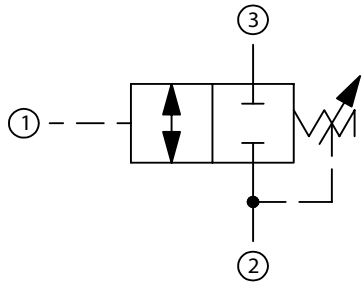

Specifications

Rated pressure	210 bar [3000 psi]
Rated flow at 7 bar [100 psi]	35 l/min [9 US gal/min]
Weight	0.24 kg [0.52 lb]
Cavity	SDC10-3

DIMENSIONS

mm [in]

Cross-sectional view

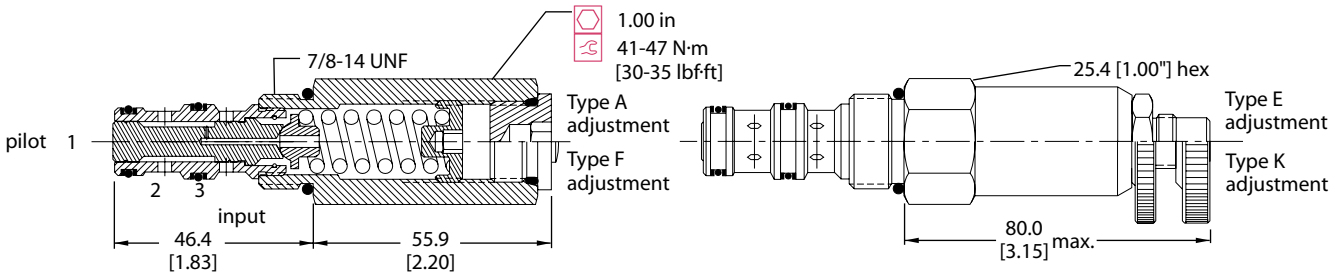

ORDERING INFORMATION

CP240 - 2 - B - 6S - A - C-100

Seals
B = Buna-N
V = Viton

Seal kit
120009
120010

Housing and ports

0	=	No Housing
SE3B	=	Al, 3/8 BSP
SE4B	=	Al, ½ BSP
6S	=	Al, #6 SAE
8S	=	Al, #8 SAE

Other housings available

Housing P/N
No Housing
SDC10-3-SE-3B
SDC10-3-SE-4B
CP10-3-6S
CP10-3-8S

Adjustment option
A = Internal
E = External
F = Tamper resistant
K = Knob

Crack pressure
Code x 10 = psi
Example: 100 = 1000 psi

Pressure range

	bar	[psi]
A =	4-28	[50-400]
Std. setting	17	[250]
B =	5-55	[75-800]
Std. setting	28	[400]
C =	7-97	[100-1400]
Std. setting	69	[1000]
D =	34-166	[500-2400]
Std. setting	103	[1500]

Comatrol
RESPONSIVENESS IN MOTION
Member of the Danfoss Group

Sequence Valves Catalog
Kick Down Type
CP240-22

OPERATION

This is a "kick-down" type sequence valve that blocks flow from 1 to 2 until sufficient pressure is applied at 1. Once open, the valve remains open until flow is completely shut off.

Schematic

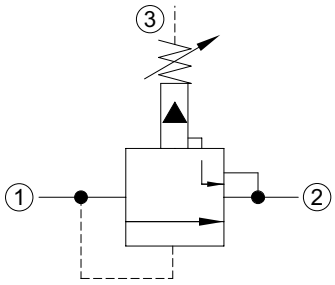

SPECIFICATIONS

Theoretical performance

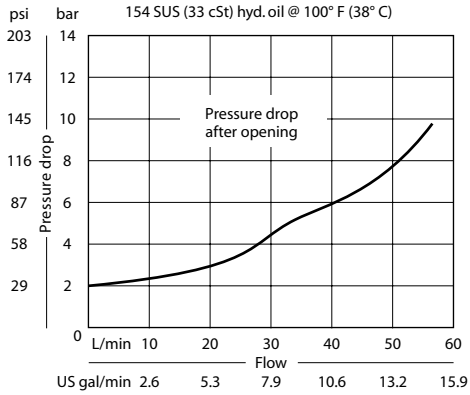

Specifications

Rated pressure	350 bar [5075 psi]
Rated flow at 7 bar [100 psi]	45 l/min [12 US gal/min]
Weight	0.19 kg [0.42 lb]
Cavity	SDC10-3

DIMENSIONS

mm [in]

Cross-sectional view

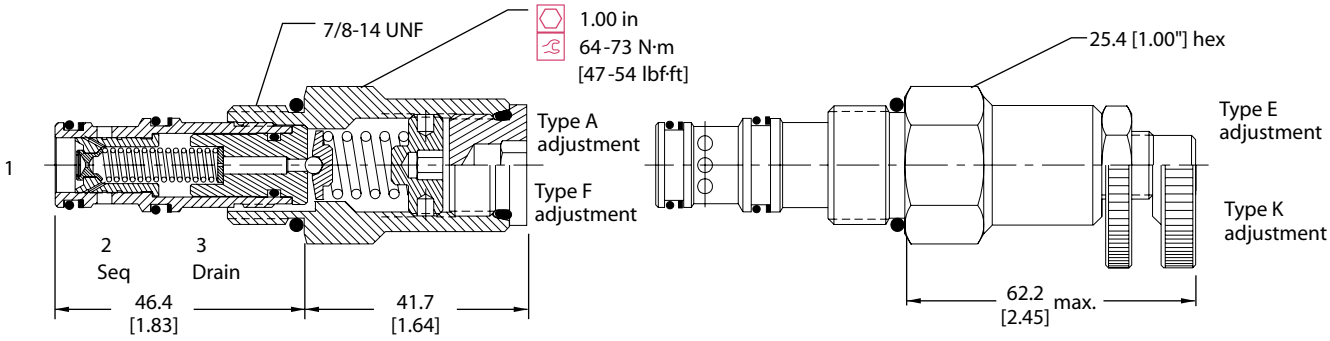

ORDERING INFORMATION

CP240 - 22 - B - 6S - A - C - 150

Seals
B = Buna-N
V = Viton

Seal kit
120027
120028

Housing and ports

			Housing P/N
0	=	No Housing	No Housing
SE3B	=	Al, 3/8 BSP	SDC10-3-SE-3B
SE4B	=	Al, ½ BSP	SDC10-3-SE-4B
6S	=	Al, #6 SAE	CP10-3-6S
8S	=	Al, #8 SAE	CP10-3-8S

Other housings available

Adjustment option
A = Internal
E = External
F = Tamper resistant
K = Knob

Crack pressure
Code x 10 = psi
Example: 150 = 1500 psi

Pressure range

		bar	[psi]
A	=	14-55	[200-800]
Standard		28	[400]
B	=	21-103	[300-1500]
Standard		69	[1000]
C	=	28-207	[400-3000]
Standard		103	[1500]
D	=	28-345	[400-5000]
Standard		103	[1500]

Comatrol
RESPONSIVENESS IN MOTION
Member of the Danfoss Group

Sequence Valves Catalog
2-Way, Normally Open
VDP 06/NA

OPERATION

This is a direct-acting, normally-open, spool-type sequence valve with external pilot and atmospheric vent.

Schematic

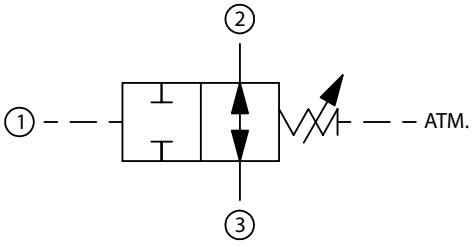

SPECIFICATIONS

Theoretical performance

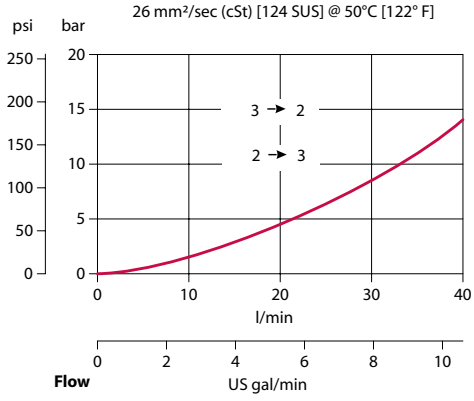

Specifications

Rated pressure	315 bar [4500 psi]
Rated flow at 7 bar [100 psi]	25 l/min [7 US gal/min]
Weight	0.26 kg [0.57 lb]
Cavity	NCS06/3

DIMENSIONS

mm [in]

Cross-sectional view

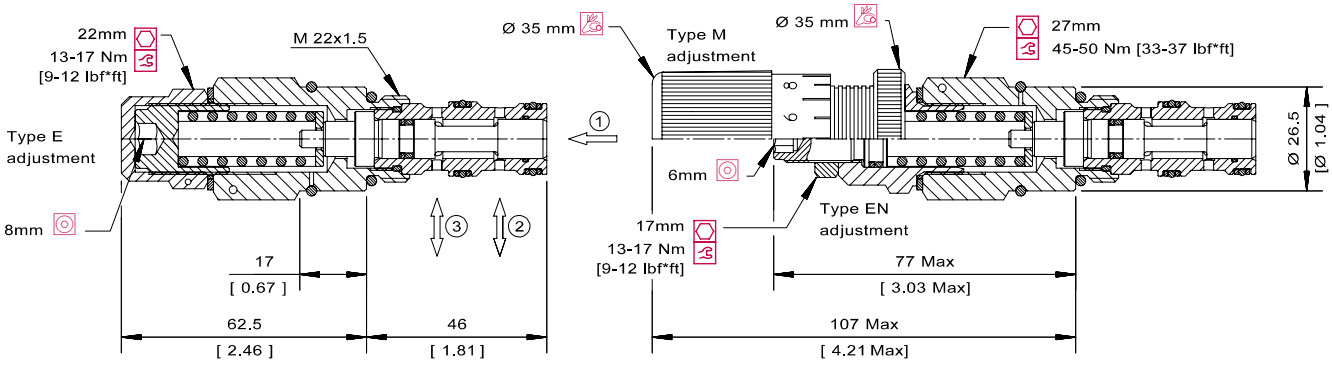

ORDERING INFORMATION

VDP 06 / NA - EN - 1 - 00 - V

Type of adjustment
E = Internal screw
EN = External screw
M = Handwheel

Setting range
1 = 15-40 bar [217-580 psi]
2 = 30-120 bar [435-3046 psi]
3 = 105-190 bar [1523-2756 psi]

Seals
V = Viton
Omit = Buna-N

Seal kit
230000590
230000430

Housing and ports

			Housing P/N
00	=	No Housing	No Housing
SE3/8	=	AL, 3/8 BSP	NCS06/3-SE-3/8
SE1/2	=	AL, ½ BSP	NCS06/3-SE-1/2
SE6S	=	AL, #6 SAE	NCS06/3-SE-6S
SE8S	=	AL, #8 SAE	NCS06/3-SE-8S

Other housings available

To order this valve with a specific factory setting, contact your Comatrol representative

Comatrol
RESPONSIVENESS IN MOTION
Member of the Danfoss Group

Sequence Valves Catalog
2-Way, Normally Closed
VDP 06/NC

OPERATION

This is a direct-acting, normally-closed, spool-type sequence valve with external pilot and atmospheric vent.

Schematic

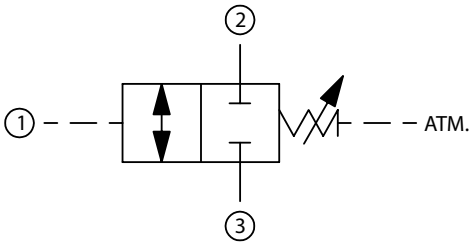

SPECIFICATIONS

Theoretical performance

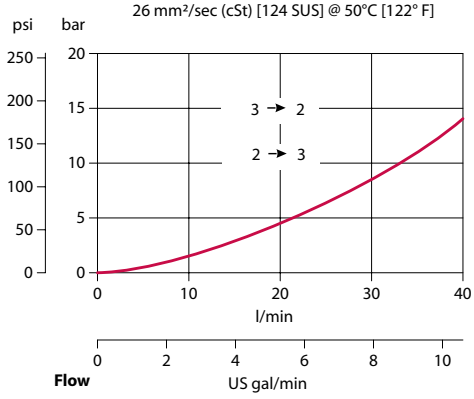

Specifications

Rated pressure	315 bar [4500 psi]
Rated flow at 7 bar [100 psi]	25 l/min [7 US gal/min]
Weight	0.26 kg [0.57 lb]
Cavity	NCS06/3

DIMENSIONS

mm [in]

Cross-sectional view

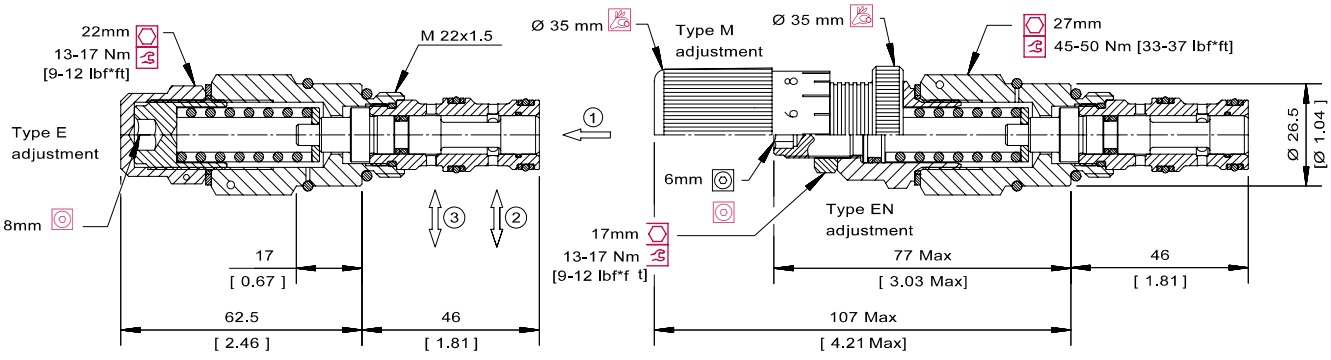

ORDERING INFORMATION

VDP 06 / NC - EN - 1 - 00 - V

Adjustment
E = Internal screw
EN = External screw
M = Handwheel

Setting range
1 = 15-40 bar [217-580 psi]
2 = 30-120 bar [435-1740 psi]
3 = 105-190 bar [1523-2756 psi]

Seals
V = Viton
Omit = Buna-N

Seal kit
230000059
230000430

Housing and ports

			Housing P/N
00	=	No Housing	No Housing
SE3/8	=	AL, 3/8 BSP	NCS06/3-SE-3/8
SE1/2	=	AL, ½ BSP	NCS06/3-SE-1/2
SE6S	=	AL, #6 SAE	NCS06/3-SE-6S
SE8S	=	AL, #8 SAE	NCS06/3-SE-8S

Other housings available

To order this valve with a specific factory setting, contact your Comatrol representative

Comatrol
RESPONSIVENESS IN MOTION
Member of the Danfoss Group

Sequence Valves Catalog
2-Way, Normally Open
CP240-5

OPERATION

Valve allows flow between 2 and 3 until sufficient pressure is applied at 1 to close the valve. Note that pressure at 4 is additive to the spring setting.

Schematic

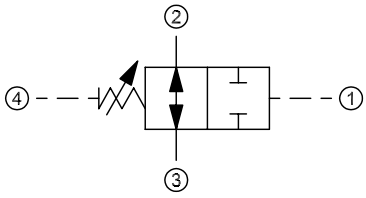

SPECIFICATIONS

Theoretical performance

33 cSt [154 SUS] hyd.oil @ 38°C [100° F]

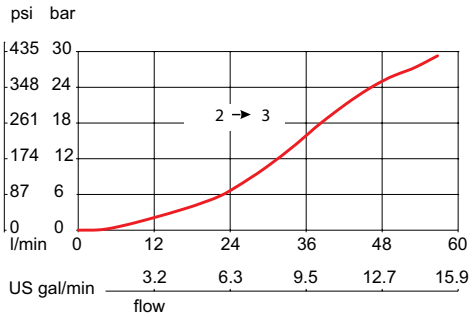

Specifications

Rated pressure	210 bar [3000 psi]
Rated flow at 7 bar [100 psi]	25 l/min [7 US gal/min]
Weight	0.26 kg [0.57 lb]
Cavity	SDC10-4

DIMENSIONS

mm [in]

Cross-sectional view

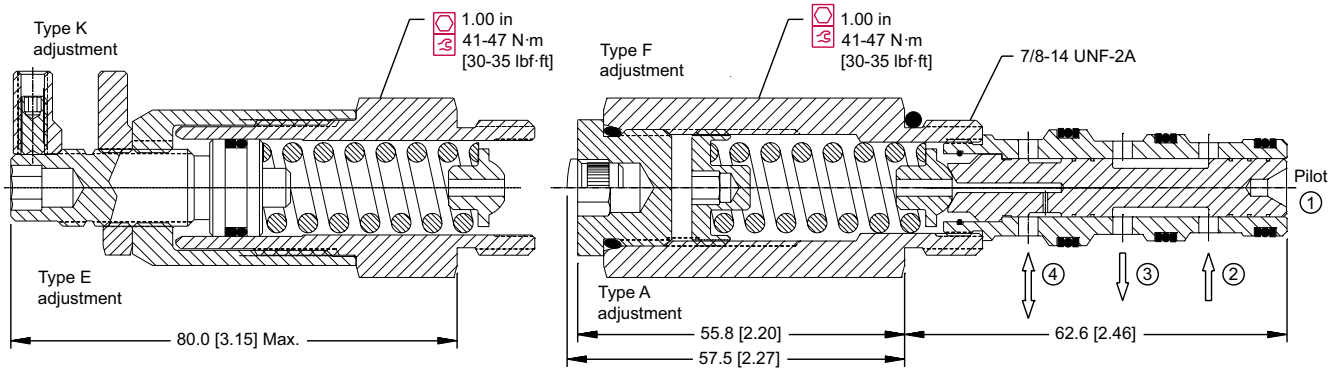

ORDERING INFORMATION

CP240-5-V-L3B-A-B-050

Seals

	Seal kit
B = Buna-N	120023
V = Viton	120024

Housing and ports

0	=	No Housing
L3B	=	AL, 3/8 BSP
L4B	=	AL, 1/2 BSP
6S	=	AL, #6 SAE
8S	=	AL, #8 SAE

Other housings available

Housing P/N

No Housing
SDC10-4-L-3B
SDC10-4-L-4B
SDC10-4-6S
SDC10-4-8S

Sequence Presure

Code x 0.69 = bar
[Code x 10 = psi]
Example: 050 = 34.5 bar [500 psi]

Pressure range

	bar	[psi]
A =	3.4 - 27.6	[50 - 400]
B =	4.8 - 55.2	[70 - 800]
C =	6.9 - 96.5	[100 - 1400]
D =	34.5 -165.5	[500 - 2400]

Adjustment option

A = Internal
E = External
F = Tamper resistant
K = Knob

Comatrol
RESPONSIVENESS IN MOTION
Member of the Danfoss Group

Sequence Valves Catalog
2-Way, Normally Open
CP240-1

OPERATION

This valve is a direct acting, spool type sequence valve with internal pilot. This valve allows flow from 2 to 3 and blocks 1. At reaching the sequence pressure 1 is opened to 2.

SPECIFICATIONS

Theoretical performance

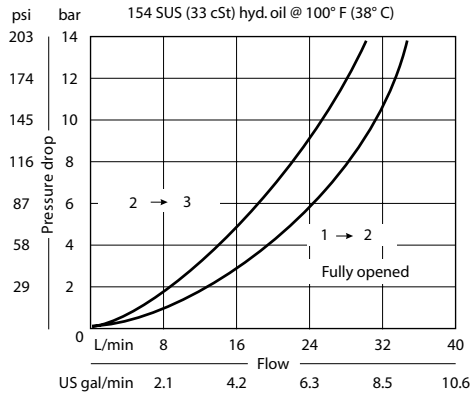

Schematic

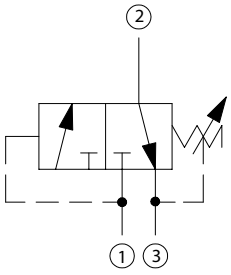

Specifications

Rated pressure	210 bar [3000 psi]
Rated flow at 7 bar [100 psi]	25 l/min [7 US gal/min]
Weight	0.25 kg [0.56 lb]
Cavity	SDC10-3

DIMENSIONS

mm [in]

Cross-sectional view

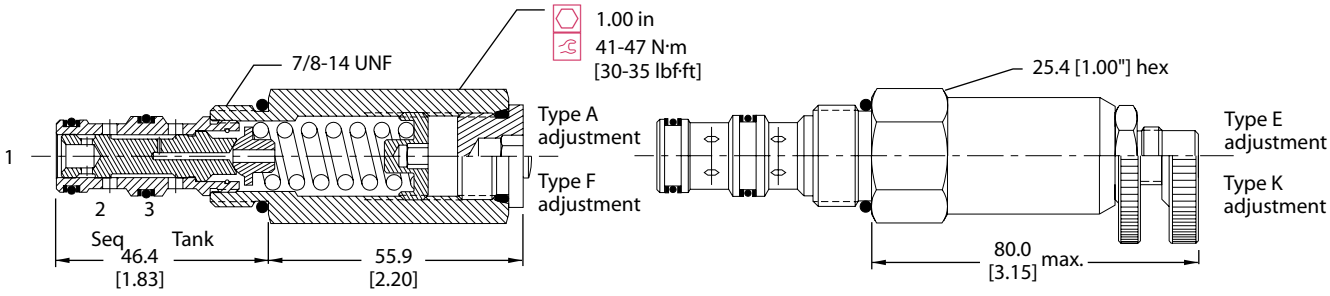

ORDERING INFORMATION

CP240 - 1 - B - 6S - A - C-100

Seals
B = Buna-N
V = Viton

Seal kit
120009
120010

Housing and ports

			Housing P/N
0	=	No Housing	No Housing
SE3B	=	Al, 3/8 BSP	SDC10-3-SE-3B
SE4B	=	Al, 1/2 BSP	SDC10-3-SE-4B
6S	=	Al, #6 SAE	CP10-3-6S
8S	=	Al, #8 SAE	CP10-3-8S

Other housings available

Adjustment option
A = Internal
E = External
F = Tamper resistant
K = Knob

Crack pressure
Code x 10 = psi
Example: 100 = 1000 psi

Pressure range

	bar	[psi]
A =	4-28	[50-400]
Std. setting	17	[250]
B =	5-55	[75-800]
Std. setting	28	[400]
C =	7-97	[100-1400]
Std. setting	69	[1000]
D =	34-166	[500-2400]
Std. setting	103	[1500]

Comatrol
RESPONSIVENESS IN MOTION
Member of the Danfoss Group

Sequence Valves Catalog

3-Way
CP240-9

OPERATION

This valve drains 3 to 2 when the pressure at 1 is below the spring setting, and connects 1 to 2 when the pressure at 1 exceeds the spring setting. Note that pressure at 2 is additive to the spring setting.

Schematic

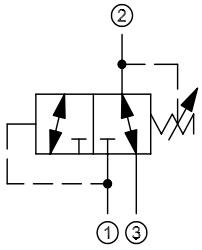

SPECIFICATIONS

Theoretical performance

33 cSt [154 SUS] hyd.oil @ 38°C [100° F]

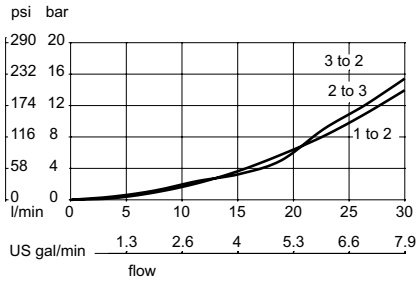

Specifications

Rated pressure	210 bar [3000 psi]
Rated flow at 7 bar [100 psi]	20 l/min [5 US gal/min]
Weight	0.24 kg [0.52 lb]
Cavity	SDC10-3

DIMENSIONS

mm [in]

Cross-sectional view

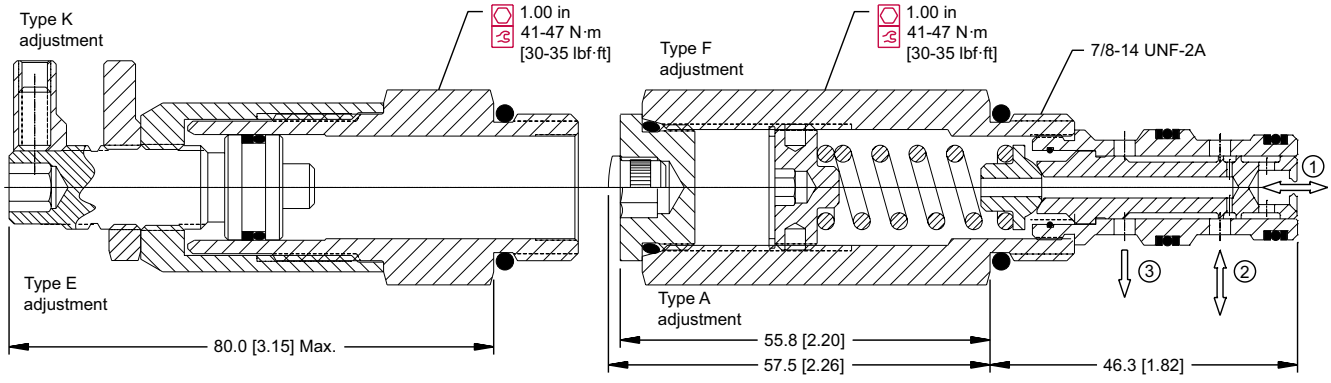

ORDERING INFORMATION

CP240-9-B-6S-E-A-020

Seals

	Seal kit
B = Buna-n	120009
V = Viton	120010

Housing and ports

0	=	No Housing
SE3B	=	Al, 3/8 BSP
SE4B	=	Al, 1/2 BSP
6S	=	Al, #6 SAE
8S	=	Al, #8 SAE

Other housings available

Housing P/N

No Housing
SDC10-3-SE-3B
SDC10-3-SE-4B
CP10-3-6S
CP10-3-8S

Crack Presure

Code x 0.69 = bar
[Code x 10 = psi]
Example: 020 = 14 bar [200 psi]

Pressure range

	bar	[psi]
A =	6.9 - 27.6	[100 - 400]
B =	20.7 - 55.2	[300 - 800]
C =	20.7 - 96.5	[300 - 1400]
D =	68.9 -165.5	[1000 - 2400]

Adjustment option

A = Internal
E = External
F = Tamper resistant
K = Knob

Comatrol
RESPONSIVENESS IN MOTION
Member of the Danfoss Group

Sequence Valves Catalog
3-Way
VDP 06/4201

OPERATION

This is a direct-acting, spool-type sequence valve with external pilot and atmospheric vent.

Schematic

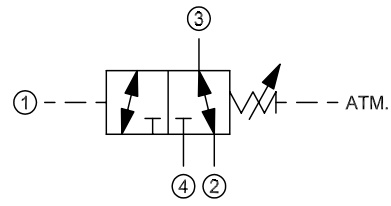

SPECIFICATIONS

Theoretical performance

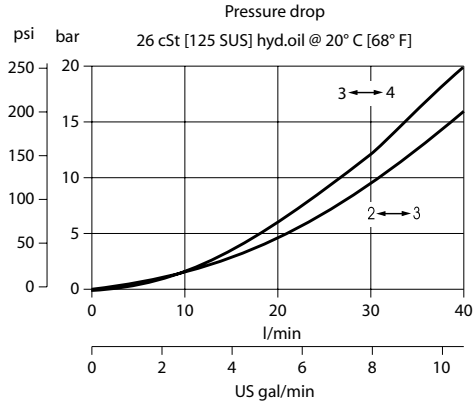

Specifications

Rated pressure	315 bar [4500 psi]
Rated flow at 7 bar [100 psi]	22 l/min [6 US gal/min]
Weight	0.28 kg [0.62 lb]
Cavity	NCS06/4

DIMENSIONS

mm [in]

Cross-sectional view

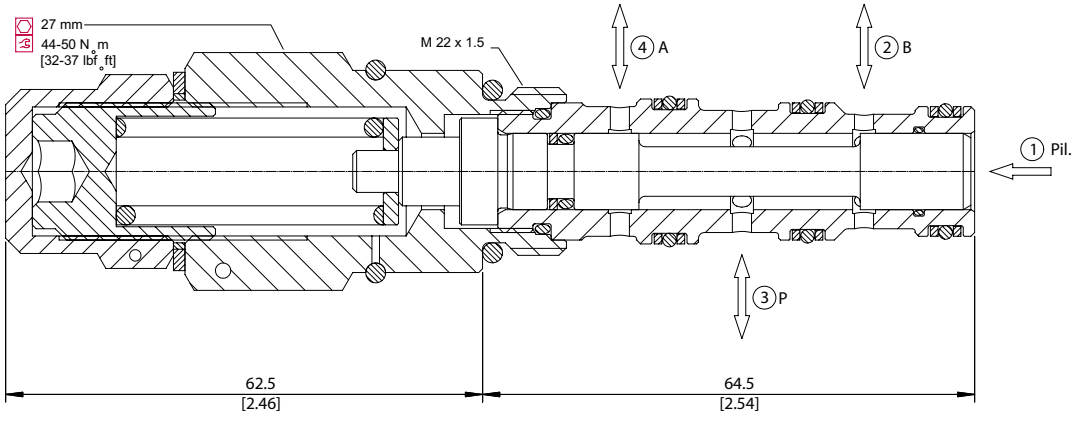

ORDERING INFORMATION

VDP 06 / 42 01 - M - 1 - 00 - V

Adjustment
E = Internal screw
EN = External screw
M = Handwheel

Setting range
1 = 15- 40 bar [220-580 psi]
2 = 30 - 120 bar [430-1740 psi]
3 = 105 - 190 bar [1520-2750 psi]

Seals
V = Viton
Omit = Buna-N

Seal kit
230000350
230000080

Housing and ports

			Housing P/N
00	=	No Housing	No Housing
L3/8	=	AL, 3/8 BSP	NCS06/4-L-3/8
L1/2	=	AL, ½ BSP	NCS06/4-L-1/2
L6S	=	AL, #6 SAE	NCS06/4-L-6S
L8S	=	AL, #8 SAE	NCS06/4-L-8S

Other housings available

To order this valve with a specific factory setting, contact your Comatrol representative

Comatrol
RESPONSIVENESS IN MOTION
Member of the Danfoss Group

Sequence Valves Catalog

Unloading Valve, Differential Area, Pilot Operated, Atmospheric Vented

VDB 06-CN

OPERATION

This is a pilot-operated, atmospherically-vented, unloading valve.

Schematic

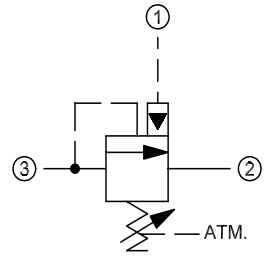

SPECIFICATIONS

Theoretical performance

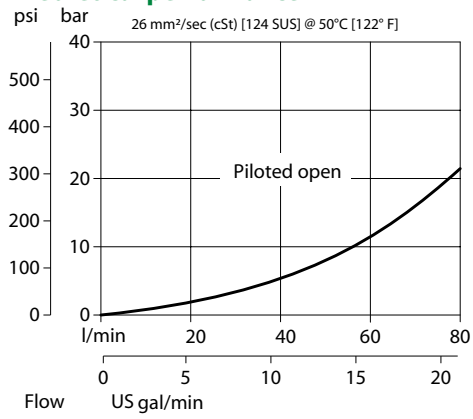

Specifications

Rated pressure	350 bar [5075 psi]
Rated flow	80 l/min [21 US gal/min]
Weight	0.29 kg [0.64 lb]
Cavity	NCS06/3

DIMENSIONS

mm [in]

Cross-sectional view

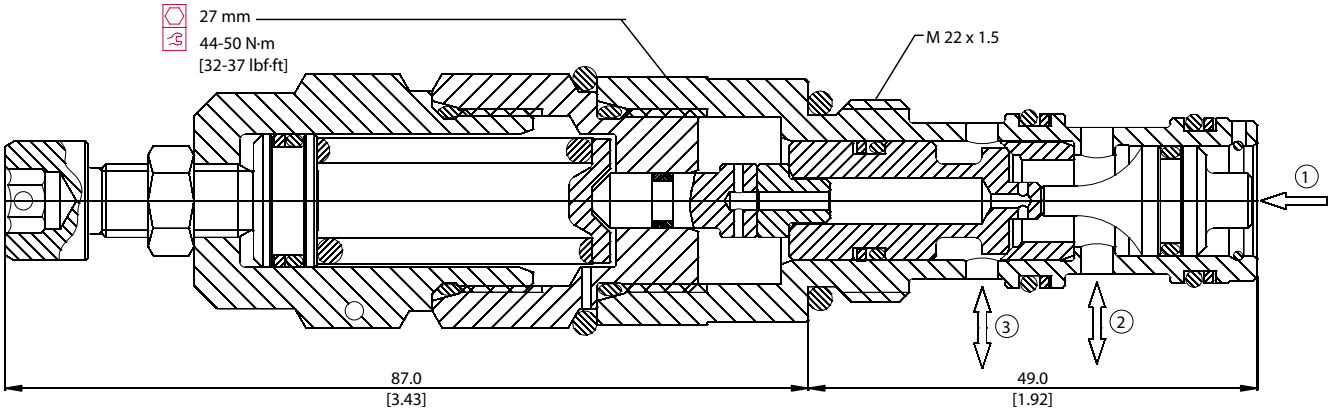

ORDERING INFORMATION

VDB 06-CN - 2 - A - 00 - V

Setting range

1 = 25 - 140 bar [362 - 2031 psi]
2 = 70 - 210 bar [1015 - 3046 psi]
3 = 105 - 350 bar [1523- 5076 psi]

Pilot ratio

A = 7.1 :1
B = 4.1 :1
E = 1 :1

Seals

V = Viton
Omit = Buna-N

Seal kit

230000110
230000070

Housing and ports

00	=	No Housing
SE3/8	=	AL, 3/8 BSP
SE1/2	=	AL, 1/2 BSP
SE6S	=	AL, #6 SAE
SE8S	=	AL, #8 SAE

Other housings available

Housing P/N

No Housing
NCS06/3-SE-3/8
NCS06/3-SE-1/2
NCS06/3-SE-6S
NCS06/3-SE-8S

To order this valve with a specific factory setting, contact your Comatrol representative

Comatrol
RESPONSIVENESS IN MOTION
Member of the Danfoss Group

Sequence Valves Catalog

Unloading Valve, Differential Area, Pilot Operated
VDB 06-EN

OPERATION

This is a pilot-operated unloading valve.

SPECIFICATIONS

Theoretical performance

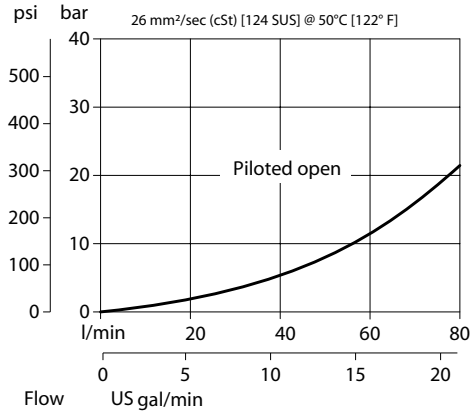

Schematic

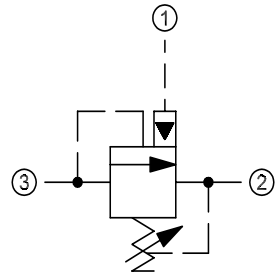

Specifications

Rated pressure	350 bar [5075 psi]
Rated flow	80 l/min [21 US gal/min]
Weight	0.21 kg [0.46 lb]
Cavity	NCS06/3

DIMENSIONS

mm [in]

Cross-sectional view

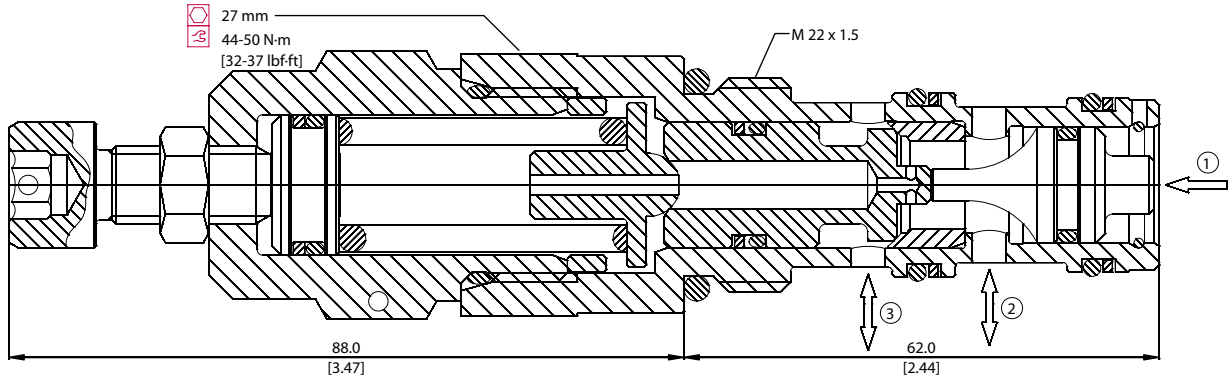

ORDERING INFORMATION

VDB 06-EN - 2 - A - SE3/8 - V

Setting range

1 = 25 - 140 bar [362 - 2031 psi]
2 = 70 - 210 bar [1015 - 3046 psi]
3 = 105 - 350 bar [1523- 5076 psi]

Pilot ratio

A = 7.1 :1
B = 4.1 :1
E = 1 :1

Seals

	Seal kit
V = Viton	230000110
Omit = Buna-N	230000070

Housing and ports

		Housing P/N
00	= No Housing	No Housing
SE3/8	= AL, 3/8 BSP	NCS06/3-SE-3/8
SE1/2	= AL, ½ BSP	NCS06/3-SE-1/2
SE6S	= AL, #6 SAE	NCS06/3-SE-6S
SE8S	= AL, #8 SAE	NCS06/3-SE-8S

Other housings available

To order this valve with a specific factory setting, contact your Comatrol representative

Comatrol
RESPONSIVENESS IN MOTION
Member of the Danfoss Group

Sequence Valves Catalog

Unloading Valve, Differential Area, Pilot Operated
VDB 12-EN

OPERATION

This is a pilot-operated unloading valve.

SPECIFICATIONS

Theoretical performance

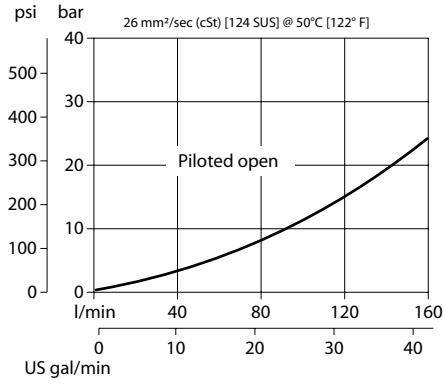

Schematic

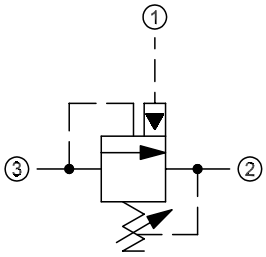

Specifications

Rated pressure	350 bar [5075 psi]
Rated flow	160 l/min [42 US gal/min]
Weight	0.70 kg [1.54 lb]
Cavity	NCS12/3

DIMENSIONS

mm [in]

Cross-sectional view

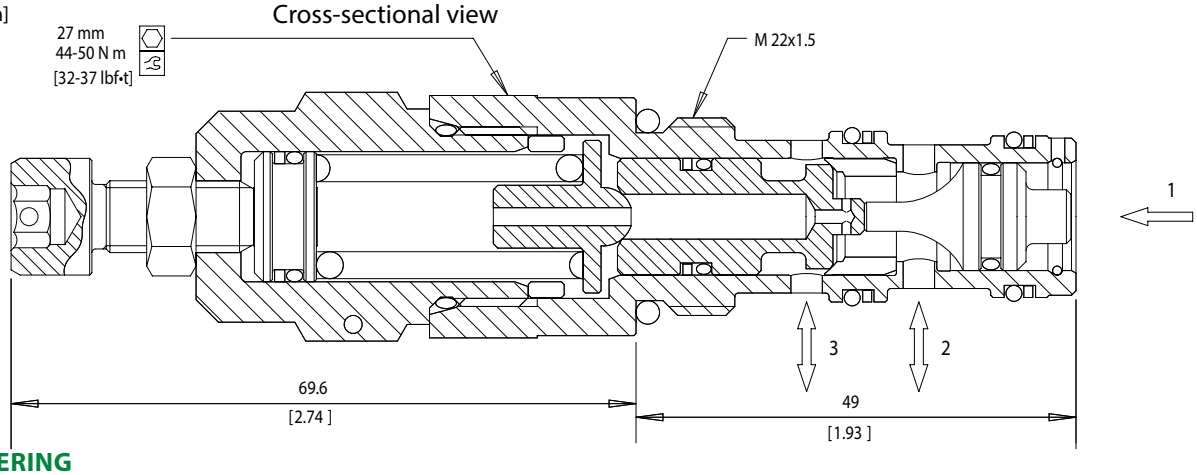

ORDERING INFORMATION

VDB 12-EN - 2 - A - 00 - V

Setting range

Pilot ratio A	Pilot ratio B
1 = 25 - 170 bar [363-2466 psi]	1 = 25 - 120 bar [363-1740 psi]
2 = 70 - 250 bar [1015-3626 psi]	2 = 60 - 200 bar [870-2900 psi]
3 = 105 - 350 bar [1523-5076 psi]	3 = 90 - 280 bar [1305-4061 psi]

Pilot ratio

A = 6.9 :1
B = 4.7 :1

Seals

V = Viton
Omit = Buna-N

Seal kit

230000360
230000130

Housing and ports

00	=	No Housing
SE1/2	=	AL, 1/2 BSP
SE3/4	=	AL, 3/4 BSP
SE8S	=	AL, #8 SAE
SE12S	=	AL, #12 SAE

Other housings available

Housing P/N

No Housing
NCS12/3-SE-1/2
NCS12/3-SE-3/4
NCS12/3-SE-8S
NCS12/3-SE-12S

To order this valve with a specific factory setting, contact your Comatrol representative

Comatrol
RESPONSIVENESS IN MOTION
Member of the Danfoss Group

Sequence Valves Catalog

Unloading Valve, Pilot Operated
CP240-30

OPERATION

This is a normally-closed sequence valve that loads and unloads a system at a pre-determined ratio.

SPECIFICATIONS

Theoretical performance

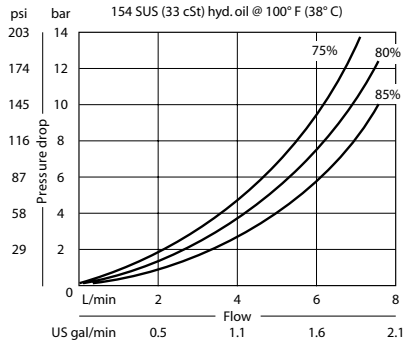

Schematic

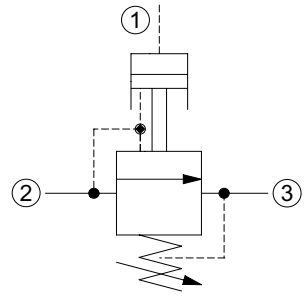

Specifications

Rated pressure	240 bar [3500 psi]
Maximum flow	4 l/min [1 US gal/min]
Weight	0.24 kg [0.53 lb]
Cavity	SDC10-3

DIMENSIONS

mm [in]

Cross-sectional view

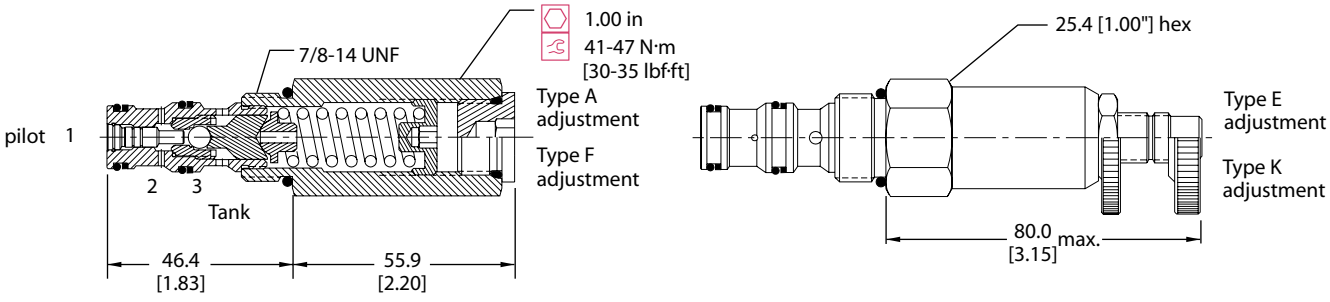

ORDERING INFORMATION

CP240 - 30 - B - 6S - A - B - 75-150

Seals
B = Buna-N — Seal kit 120027
V = Viton — 120028

Housing and ports

			Housing P/N
0	=	No Housing	No Housing
SE3B	=	Al, 3/8 BSP	SDC10-3-SE-3B
SE4B	=	Al, 1/2 BSP	SDC10-3-SE-4B
6S	=	Al, #6 SAE	CP10-3-6S
8S	=	Al, #8 SAE	CP10-3-8S

Other housings available

Adjustment option
A = Internal
E = External
F = Tamper resistant
K = Knob

Crack pressure
Code x 10 = psi
Example: 150 = 1500 psi

Pressure ratio
75 = 75%
80 = 80%
85 = 85%

Pressure range

	bar	[psi]
A =	28-103	[400-1500]
Std. setting	69	[1000]
B =	62-240	[900-3500]
Std. setting	103	[1500]

P102 182E

Comatrol
RESPONSIVENESS IN MOTION
Member of the Danfoss Group

Sequence Valves Catalog

Unloading Valve, Pilot Operated, Spool
AUV 06

OPERATION

This is a normally-closed sequence valve that loads and unloads a system at a pre-determined ratio.

Schematic

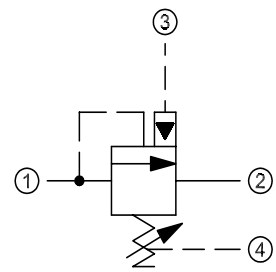

SPECIFICATIONS

Theoretical performance

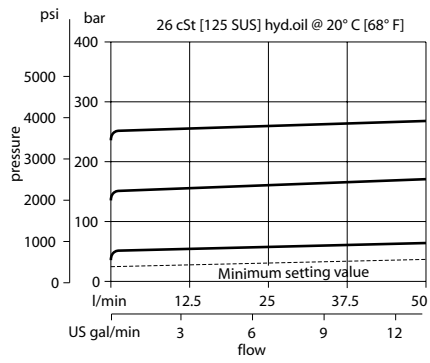

Specifications

Rated pressure	250 bar [3600 psi]
Rated flow	50 l/min [13 US gal/min]
Weight	0.22 kg [0.49 lb]
Cavity	NCS06/4

DIMENSIONS

mm [in]

Cross-sectional view

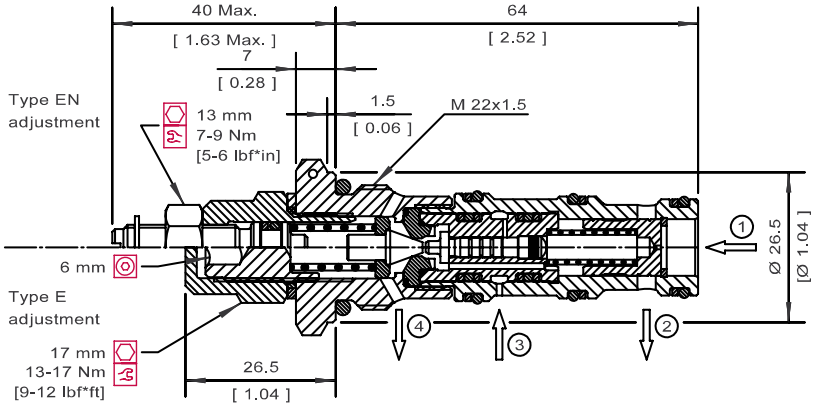

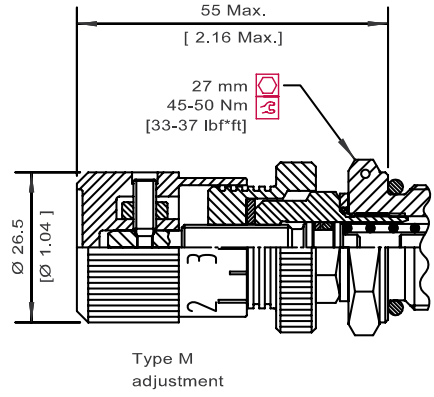

ORDERING INFORMATION

AUV 06 - EN - 1 - A - L3/8 - V

Adjustment
E = Internal screw
EN = External screw
M = Handwheel

Setting range
1 = 10-70 bar [145-1015 psi]
2 = 30-140 bar [435-2031 psi]
3 = 70-210 bar [1015-3046 psi]

Pressure ratio
A = 85%

Seals
V = Viton
Omit = Buna-N

Seal kit
230000350
230000080

Housing and ports

			Housing P/N
00	=	No Housing	No Housing
L3/8	=	AL, 3/8 BSP	NCS06/4-L-3/8
L1/2	=	AL, 1/2 BSP	NCS06/4-L-1/2
L6S	=	AL, #6 SAE	NCS06/4-L-6S
L8S	=	AL, #8 SAE	NCS06/4-L-8S

Other housings available

To order this valve with a specific factory setting, contact your Comatrol representative